

Kiawah Island

2026 Designing With Nature

Architectural Review Board Standards and Guidelines

Dear Property Owner:

From the beginning, the goal of the community development on Kiawah has been to achieve an uncommon and visually pleasing blend of natural beauty and man-made improvements. Resort activity, recreational areas, and residential development have all been planned together.

Kiawah's community developers, both past and present, have also implemented a well-researched plan to guide property development for residential, commercial, recreational uses, and common properties, which they administer through the Architectural Review Board (ARB).

Environmentally sensitive design is best achieved through a careful, well-thought-out response to the attributes of a property: the Lowcountry climate, existing vegetation, and topography of the building site. Research and reflection over the years have revealed time and time again that Kiawah's most outstanding feature is its natural beauty. The ARB is committed to protecting and enhancing this precious asset. Thus, one of our primary objectives is to assist you in your planning efforts, and we stand ready to do so.

These standards and guidelines are intended to serve as your benchmark in the complex, yet rewarding, process of planning or improving a property. While this document has proven to be a helpful tool in planning properties on Kiawah, it can neither provide all the answers nor guarantee ideal solutions for every situation.

Nevertheless, as questions arise concerning your building plans, the staff and we at the ARB will be available to assist you. We encourage you to participate, when possible, in presentations to the ARB as they are made by your architect, landscape architect, or builder.

We also hope that you and your team of professionals find these standards and guidelines helpful, and we encourage your questions and comments. If we may be of assistance, please do not hesitate to call on us.

Respectfully,

The Kiawah Island Architectural Review Board

TABLE OF CONTENTS

1. INTENT OF THE GUIDELINES 4
1.1. DESIGN OBJECTIVES OF THE ARCHITECTURAL REVIEW BOARD
1.2. FUNCTION OF THE ARCHITECTURAL REVIEW BOARD
1.3. PURPOSE OF THE STANDARDS AND GUIDELINES 5
1.4. VARIANCES
1.5. LOT COMBINATIONS, SUBDIVISIONS, AND PROPERTY LINE CHANGES 6
2. DESIGN GUIDELINES 7
2.1. LANDSCAPE
2.1.1. GENERAL REQUIREMENTS AND DESIGN OBJECTIVES
2.1.2. EXISTING VEGETATION 8
2.1.3. GRADING AND DRAINAGE 9
2.1.3.1. EROSION CONTROL METHODS
2.1.4. HARDSCAPE 10
2.1.4.1. DRIVEWAYS
2.1.4.2. PARKING 12
2.1.4.3. WALKWAYS
2.1.4.4. FENCES AND GATES 13
2.1.4.5. AMENITY AREAS
2.1.5. SOFTSCAPE 14
2.1.5.1. TREES 15
2.1.5.2. SHRUBS 16
2.1.5.3. LAWNS, GROUNDCOVER, AND MULCH 17
2.1.5.4. IRRIGATION REQUIREMENTS
2.1.5.5. LANDSCAPE LIGHTING 18
2.2. ARCHITECTURE
2.2.1. RESIDENTIAL 19
2.2.1.1. SINGLE-FAMILY
2.2.1.2. PATIO HOMES 20
2.2.1.3. TOWNHOMES AND MULTI-FAMILY
2.2.2. COMMERCIAL
2.2.2.1. RETAIL
2.2.2.2. HOSPITALITY AND RECREATION
2.2.2.3. UTILITIES 21
2.2.3. EXISTING BUILDINGS
2.2.3.1. NONCONFORMING CONDITIONS AND COMPLIANCE
2.2.3.2. MAINTENANCE AND IMPROVEMENTS 22
2.2.3.3. LANDSCAPE MAINTENANCE, IMPROVEMENTS, AND TREE REMOVAL 23
2.2.3.4. DEMOLITION OF EXISTING BUILDINGS 24
2.2.4. BUILDING SETBACKS AND EASEMENTS 25
2.2.5. LOT COVERAGE 26
2.2.6. BUILDING SIZE 27
2.2.7. BUILDING HEIGHT 28
2.2.8. BUILDING FORM
2.2.9. ARTICULATION 29
2.2.10. MATERIALS AND COLORS 30
2.2.11. SERVICE AND UTILITY ELEMENTS 33
2.2.12. ARCHITECTURAL LIGHTING 34
2.2.13. APPURTENANCES
2.2.13.1. MAILBOXES
2.2.13.2. SIGNAGE 35
2.2.13.3. RECREATIONAL EQUIPMENT AND VEHICLES
2.2.13.4. BOARDWALKS
2.2.13.5. TRANSMISSION DEVICES 36
2.2.13.6. STORM PROTECTION 37
2.2.13.7. DOCKS
2.2.13.8. POOLS
2.2.13.9. VIEW STANDS 38
3. REVIEW PROCESS 39

3.1. DESCRIPTION OF THE PROCESS 39
3.1.1. AESTHETIC OBJECTIVES
3.1.2. ARB MEETINGS
3.1.3. ARB STAFF
3.1.4. SUBMITTALS
3.1.5. APPROVALS AND PERMITS 40
3.2. NEW CONSTRUCTION REVIEW PROCESS AND SUBMITTAL REQUIREMENTS
3.2.1. SITE ANALYSIS
3.2.2. CONCEPTUAL REVIEW 42
3.2.3. PRELIMINARY REVIEW 43
3.2.4. FINAL REVIEW 46
3.3. EXISTING BUILDING REVIEW PROCESS AND SUBMITTAL REQUIREMENTS 48
3.3.1. MAINTENANCE REVIEW
3.3.2. IMPROVEMENT REVIEW 49
3.3.3. MAJOR IMPROVEMENT REVIEW
3.3.4. DEMOLITION REVIEW 51
4. CONSTRUCTION PROCESS 52
4.1. GENERAL REGULATIONS
4.1.1. ISLAND ACCESS
4.1.2. HOURS OF OPERATION
4.1.3. CONDUCT AND APPEARANCE
4.1.4. CONSTRUCTION DURATION
4.1.5. VIOLATIONS 53
4.2. BEFORE CONSTRUCTION
4.2.1. ARB PERMIT
4.2.2. CONSTRUCTION SIGN 55
4.2.3. WILDLIFE
4.2.4. DE-WATERING
4.2.5. SITE CLEARING
4.3. DURING CONSTRUCTION 56
4.3.1. CONSTRUCTION SITE ACCESS
4.3.2. CONSTRUCTION SITE APPEARANCE
4.3.3. MATERIAL STORAGE AND WASTE DISPOSAL
4.3.4. ONSITE REQUIREMENTS
4.3.5. CHANGES AFTER FINAL APPROVAL 58
4.3.6. DELAYS AND ABANDONMENT
4.3.7. DEMOLITION SITES 59
4.4. INSPECTIONS
4.4.1. FOUNDATION SURVEY AND SITE CONDITIONS
4.4.2. MATERIALS AND COLORS MOCK-UP
4.4.3. FINAL LANDSCAPE PLAN 60
4.4.4. FINAL INSPECTION AT CONCLUSION OF CONSTRUCTION
5. APPENDIX 63
5.1. DEFINITIONS
5.2. RESOURCES 66
5.3. LOT COVERAGE GRAPHIC 67
5.4. DRIVEWAY-STREET DETAIL 68
5.5. MATERIAL AND COLOR SAMPLE BOARD 69
5.6. CONSTRUCTION SIGN GRAPHIC & SPECIFICATIONS 70
5.7. CONSTRUCTION SIGN WITH GREEN BUILDING CERTIFICATION GRAPHIC & SPECIFICATIONS 71
5.8. STANDARD MAILBOX 72
5.9. VEGETATION REMOVAL GRAPHIC FOR UNDEVELOPED LOTS 73
5.10. BEACHFRONT VIEW CORRIDOR GRAPHIC 74
6. INDEX 75

1. INTENT OF THE GUIDELINES

Composed of approximately 10,000 acres, Kiawah Island enjoys a moderate climate, breathtaking natural beauty, controlled accessibility, and the professional and financial resources necessary to create a residential and resort community without compromise or parallel. Over the years of Kiawah Island's development, the Kiawah Island Architectural Review Board (ARB) has been dedicated to preserving the experience of this unique and ecologically sensitive community.

1.1. DESIGN OBJECTIVES OF THE ARCHITECTURAL REVIEW BOARD

The architectural design and construction philosophy of the ARB emphasizes that buildings should generally be unobtrusive in form, material, and color in order to complement their natural setting. No particular period, architectural style, foreign or geographic influence is specifically endorsed or discouraged. The chief goal is that the community be harmonious, with certain areas having more stylistic specificity than others.

This philosophy suggests that each building be treated not as an individual creation or architectural entity arbitrarily placed on its site, but rather as a carefully planned addition to the natural setting which embraces the site and becomes one with it. Design solutions should extend beyond the building walls to include the entire site, varying in design to complement and enhance their natural surroundings. Designs and colors appropriate for the mottled shade of forest areas might be inappropriate for open or unwooded sites. Colors and textures of exterior building materials should be compatible with the light-reflecting properties of the natural elements, such as tree bark, surrounding trees and shrubs, pine needles, natural grasses, and other vegetation.

1.2. FUNCTION OF THE ARCHITECTURAL REVIEW BOARD

The Kiawah Island General Covenants delegate the control of Island development to Kiawah Resort Associates (i.e., the "Company") as successor to Kiawah's initial developer. The COVENANTS, RESTRICTIONS, AND AFFIRMATIVE OBLIGATIONS APPLICABLE TO ALL PROPERTIES IN KIAWAH ISLAND, Article II, Section 1 reads as follows:

"No building, fence, or other structure shall be erected, placed, or altered nor shall a building permit for such improvement be applied for on any property in Kiawah Island until the proposed building plans, specifications, exterior color or finish, plot plan (showing the proposed location of such building or structures, drives, and parking areas), landscape plan, and construction schedule shall have been approved in writing by the Company, its successors, or assigns. Refusal of approval of plans, location, or specification may be based by the Company upon any ground, including purely aesthetic conditions, which in the sole and uncontrolled discretion of the Company shall seem sufficient. No alteration in exterior appearance of any building or structure shall be made without like approval by the Company…."

The ARB was organized for the purpose of controlling and enhancing Island development, with the composition of members determined by the Company.

ARB approval and the subsequent issuance of an ARB permit are necessary for exterior construction, alterations, and maintenance in addition to procedures administered by the *Town of Kiawah Island* (TOKI) for obtaining zoning and building permits. An encroachment permit from the *Kiawah Island Community Association* (KICA) Livability Department will also be required.

The South Carolina Department of Environmental Services' (SCDES) *Bureau of Coastal Management* (BCM) has jurisdiction over some elements of the building process on Kiawah Island. The property owner and their representatives are solely responsible for compliance with BCM rules and regulations that

apply to lots that border salt marsh and certain lagoons, which are considered critical areas. The BCM also has jurisdiction for structures near primary, oceanfront dunes. As a rule, front beach land at Kiawah has been platted landward of the setback line established by the BCM and the primary dune line, which, along its crest, demarcates the baseline established by the BCM. All properties must comply with the State's *Stormwater Management and Sediment Reduction Act*.

The approval of the ARB relates to the harmony and compatibility between architecture and optimal site design. The ARB does not assume liability for structural design, material sufficiency, grading and drainage impact, or damage to neighboring property during or after construction. ARB approval does not constitute any opinion or representation by the ARB that design plans comply with any municipal, state, or federal laws.

1.3. PURPOSE OF THE STANDARDS AND GUIDELINES

The ARB is granted the power to establish design guidelines through Article II of the General Covenants, which reads as follows:

"The primary purpose of these covenants and restrictions and the foremost consideration in the origin of the same has been the creation of a community which is aesthetically pleasing and functionally convenient. The establishment of objective standards relating to the design, size, and location of dwellings and other structures makes it impossible to take full advantage of the individual characteristics of each parcel of property and of technological advances and environmental values. For this reason, such standards are not established by these covenants. In order to implement the purposes of these covenants, the Company shall establish and amend from time to time objective standards and guidelines which shall be in addition to these covenants."

It is the purpose then of these standards and guidelines to encourage the construction of excellent architectural design that is appropriate to the surroundings and to the special conditions of climate and other environmental factors indigenous to Kiawah Island. A strong sense of identity should be developed to create an attractive and harmonious addition to the community. These standards and guidelines are intended also to assist property owners, and their design and building professionals, during the design, construction, alteration, and maintenance of their properties; to protect the property values of all property owners throughout the Island; and to provide professional aesthetic evaluation for all construction requiring ARB approval through a systematic review process.

As originally conceived and applied, the strong emphasis on single-family and patio home design in *Designing With Nature* (DWN) has been used to also influence and direct the design and construction of larger and more intensive development, including townhomes, multi-family residences, and commercial projects. Standards and guidelines specific to a particular type of development are identified as such throughout this document.

These standards and guidelines are amended from time to time by the ARB as deemed necessary. The ARB will adjust project review to accommodate the dynamic nature of regulations set by other entities with jurisdiction on Kiawah Island, i.e., building code adoptions and revisions, floodplain requirements, etc.

1.4. VARIANCES

Variances to building setbacks (whether on the subdivision Plat of Record or not), lot coverage, building height, square footage, and other aspects of building and site design, including landscape alterations, may be approved by the ARB to preserve prominent trees, minimize disruption to unique topography, to accommodate an irregularly shaped lot, or when the ARB determines in its sole discretion that a variance

to DWN criteria is otherwise appropriate to the site.

All such determinations are unique to the requested condition, are not precedent-setting, and are final and binding on all concerned. If a variance is approved by the ARB, a variance from TOKI may be required as well. When applying for variances to Town ordinances, ample time for accommodation of review requirements by TOKI Board of Zoning Appeals (BZA) should be considered.

Variances should be clearly identified, showing the extent of the variance (i.e., distance, area, percentage, etc.) and should include a completed *Variance Request Form*. Insufficient information or an incomplete form may result in the disapproval of a variance request. See *2.2.3.1. NONCONFORMING CONDITIONS AND COMPLIANCE* for additional information about existing structures.

Only variances specifically requested and approved in writing shall be considered granted and valid. It is the responsibility of the property owner and their representatives to identify and request variances.

1.5. LOT COMBINATIONS, SUBDIVISIONS, AND PROPERTY LINE CHANGES

Any lot combination, subdivision, or property line change must receive approval from the Company and the ARB before submittal to TOKI and/or Charleston County's *Register of Deeds (ROD) Office*. For changes to properties with KICA easements, review and approval from KICA is also required.

During ARB review of lot modifications, setbacks will be determined, and existing building setbacks may potentially be adjusted. In particular, side yard building setbacks are likely to be increased depending on the specific circumstances. Reduced massing in areas near side yard building setbacks and reduced lot coverage may be required as well.

Of note, lots subject to conditioned area maximums are considered a single property once combined, and therefore, the maximum is not increased unless specifically addressed by deed or by ARB approval.

For combined lots, or adjoined lots owned by the same property owner, formal landscaping or sodded areas should be limited to the buildable area and included in secondary lot coverage calculations.

Return to top of section.

Return to Table of Contents.

2. DESIGN GUIDELINES

One of the major goals of every architect, landscape architect, and builder working on Kiawah Island should be to integrate every man-made structure harmoniously with its surrounding natural environment. As each site is unique, it is necessary to prepare a thorough site analysis before the design of every project. The ARB will closely scrutinize the overall design concept and how well it relates to its surrounding environment.

In addition to detailed site data, more general information about the surrounding physical environment must be included. Consideration should be given to prominent and potential views, orientation for privacy from the street, neighbors, golf courses, etc. The materials, scale, and form of nearby buildings should also be taken into account. These factors are important in blending the proposed design with the existing neighborhood fabric.

The design of each building must also address the prominent climatic characteristics of the Island. The warm temperatures suggest that every building should have adequate cooling capabilities. Designs should take advantage of the cooling breezes by providing cross-ventilation. With the majority of the days being sunny, there is potential for using passive and active solar systems.

After preparing the site analysis, the uniqueness of each site becomes apparent. Because of each site's distinct characteristics, a design that is appropriate on one site may not be equally appropriate for another site. For single-family lots, the repetitive use of designs or the use of stock plans is generally inappropriate.

In addition to following these design guidelines, LEED certification may be pursued, and property owners and their design teams are encouraged to do so while undergoing the design of their property. Other third-party accreditations may be pursued as well. Contact the ARB for assistance with coordinating such standards with DWN.

2.1. LANDSCAPE

Kiawah Island's natural setting offers a unique environment that must be acknowledged and preserved as a framework for development. The Island's special natural environment is ecologically fragile and is difficult to replace once it has been disturbed. The guidelines are intended to indicate the seriousness with which the ARB approaches alterations to the Island's vegetation.

2.1.1. GENERAL REQUIREMENTS AND DESIGN OBJECTIVES

These landscape guidelines are intended to protect the property values of all property owners throughout the Island, as Kiawah's most outstanding feature is its natural beauty. The guidelines should be used to define the appropriate site planning and landscaping for each lot or parcel. Many single-family neighborhoods have supplemental guidelines in addition to DWN that need to be taken into account when developing the landscape for properties. See *2.2.1.1. SINGLE-FAMILY* for more information.

The basic objectives of a landscape architect preparing site and landscape plans for a property on Kiawah should be:

1. To minimize the impact of the building on the surrounding natural environment, and to see that the site's existing landscape is preserved in its natural state, insofar as possible.
2. To enhance the built environment and integrate buildings and other structures into the surrounding natural environment.
3. To consider both long and short views to and from a project.

The entire site must be planned. If areas are to remain natural, they should be indicated as such on all submittals. The genus and species of trees and major understory vegetation must be identified and indicated on surveys and landscape plans.

All proposed landscaping for new construction and major landscape improvements to existing buildings must be prepared by a landscape architect licensed to practice in the State of South Carolina.

2.1.2. EXISTING VEGETATION

Significant trees and areas of understory vegetation are essential, natural, and aesthetic resources. They play a critical role in purifying air and water, providing wildlife habitat, enhancing natural drainage, and controlling erosion. These trees and shrubs contribute to the quality of life on Kiawah and are an inseparable part of its historical legacy. As such, the ARB is most concerned with trees and shrubs and has established these standards and guidelines to ensure their preservation.

The following are general guidelines that must be adhered to regarding existing vegetation:

1. Pruning in sensitive areas: lagoon edges, marsh edges, maritime forest, and beachfront areas contain some of the most sensitive vegetation on the Island, and pruning here must be reviewed by the ARB.

   Natural drainage patterns, erosion control, and wildlife habitat may be easily disturbed by careless over-pruning. In addition, areas near marsh edges may be subject to further restrictions imposed in connection with the *Stormwater Management and Sediment Reduction Act*. Therefore, pruning in these sensitive areas is prohibited unless ARB approval is received following an onsite review with the certified arborist once a building is framed.

   The extent and timing of pruning may be further managed so that dune vegetation is pruned during the dormant winter period and areas near known Bobcat habitats are pruned outside of active denning season.

   In all cases where such pruning is allowed, it shall be kept to a minimum, conform to existing natural patterns of growth, and be completed by a certified arborist. Pruning should occur after the building has been framed, so that view windows may be established from primary living spaces. Lagoon and beachfront pruning are reviewed by both KICA and the ARB, with the goal being that the foundation, large expanses of wall, and roof elements are shielded by tree canopy while the primary living spaces have view windows.
2. View corridors may be established from time to time by deed, plat, or other written agreement. Tree removals and pruning within these corridors are allowed following ARB review and approval.

   The ARB encourages the installation of lower-growing vegetation along property lines between beachfront lots to allow for view windows from the back flag lots. Taller material may be approved on a case-by-case basis. See *5.10. BEACHFRONT VIEW CORRIDORS GRAPHIC* for more information.
3. Natural vegetated buffers, especially along lot edges, shall be preserved and enhanced with native species and planted in an informal manner. Trees, shrubs, and other understory vegetation should remain dense from ground level up to ten (10) feet and remain intact within five (5) feet of the property line.
4. For lots or parcels abutting golf courses, existing vegetation along shared property lines shall remain in place to allow for a continuous buffer, with similar species of evergreen plantings required to vegetate any open areas.
5. On undeveloped lots or parcels, the ARB allows existing vegetation under three (3) inches DBH caliper to be removed within the buildable area in order to aid in site development design. All

debris material must be removed or chipped and scattered. Access to the site should be angled to conceal the cleared area from view from the road. Buffers along all property lines shall remain intact.

This work may be completed following notification to the ARB with submittal of the *Vegetation Removal Request Form* and a site plan, plat, or pictures showing the access point and area to be impacted. See *5.9. VEGETATION REMOVAL GRAPHIC FOR UNDEVELOPED LOTS* for more information.

Violations of the above guidelines may result in substantial fines and mitigation requirements. If vegetative mitigation does not thrive after nine (9) months from installation, replacement is required.

2.1.3. GRADING AND DRAINAGE

Every possible effort shall be made by each property owner's landscape architect to develop site plans consistent with the natural grading pattern. Excessive fill is discouraged so as to integrate buildings closely with the existing terrain. It is critical that the drainage system and any applicable easements within the immediate area of the site be integrated into the overall landscape design.

1. The ARB's purview in its review of grading on building and landscape plans is only for aesthetics. The ARB does not conduct a technical review, nor does it become involved in the adequacy or performance of any aspect of the design. Those responsibilities rest entirely with the owner's design representatives.

   Even though the ARB does not evaluate the design sufficiency of drainage plans, the ARB does want to make sure that the owner's design representative has done so. In this regard, the procedures set forth in DWN require a certification on the grading and drainage plan from the project landscape architect or engineer to certify that *"final grading must be completed in such a way that it does not adversely affect drainage or vegetation on adjoining property or roadside swales."* The ARB's aesthetic approval of plans does not relieve the property owner and the involved design representatives of responsibility to make sure the drainage plans are sufficient and will cause no harm to neighboring properties.

2. Open-loop geothermal systems will not be approved as they may adversely affect the drainage of neighboring properties and are not environmentally sensitive.
3. The ARB encourages the creative use of low-impact development practices for stormwater management. Examples of these include, but are not limited to, pervious paving systems, preservation of vegetated buffers, rain gardens, and rain harvesting with rain barrels and cisterns. For more information on these applications, see the Conservancy of the Sea Islands' *Nature-Based Solutions Manual for Kiawah Island*.
4. Rain gardens, where appropriate, should be designed to include water-tolerant species and not allow overflow onto neighboring properties. Gravel and rock components of the rain garden should be hidden from view with mulch or plantings.

2.1.3.1. EROSION CONTROL METHODS

Erosion is considered the loss of high ground within a short timeframe. Active erosion is typically established through the measurable movement of the surveyed BCM critical line as evidenced by changes to the vegetative and topographic character of the shoreline, such as exposed bare dirt, lack of natural vegetation, exposed roots, and/or undercutting, scouring, slumping of high ground, etc.

Erosion control methods that are natural in appearance, with native plantings, are preferred where appropriate.

Applicants are encouraged to submit for ARB pre-conceptual approval of an erosion control method before engaging a professional engineer and submitting for BCM approval and permit. All erosion control requires ARB review and approval. The following methods require BCM approval if located in proximity to the BCM critical line.

Stamped drawings and a current BCM critical line survey must be included with the submittal, showing the area and extent of the installation as well as details of the proposed scope of work.

A. LIVING SHORELINE AND MECHANICALLY STABILIZED EARTH WALLS

Living shoreline installations are encouraged where appropriate, as these methods allow for the stabilization of land while providing habitat, and are natural in appearance. Mechanically stabilized earth (MSE) wall systems should be natural in appearance, not negatively impact existing vegetation, trees, or adjacent grades, and incorporate native plantings. MSE wall systems are to be considered when there is evidence of more significant erosion. If located along golf courses, approval from the ARB and the golf course owner is needed.

For more information on living shorelines, see the Conservancy of the Sea Islands' *Nature-Based Solutions Manual for Kiawah Island*.

B. BULKHEADS

Installation of, and alterations to, all bulkheads require ARB review and approval. Installation of, and alterations to, bulkheads in critical areas require BCM, ARB, and TOKI approval. The application of bulkheads will only be considered when there is evidence of active erosion. Bulkhead applications require a licensed engineer specializing in erosion control.

1. Where bulkheads are approved, they should be fabricated with natural and blending materials.
2. The use of riprap may be allowed in limited circumstances and, when approved, must be located below the mean high-water line.
3. Landscape plantings shall be required to mitigate exposure of bulkheads from marsh views, and connecting bulkheads should always be consistent in design and materials. See *1.2. FUNCTION OF THE ARCHITECTURAL REVIEW BOARD* for additional information.
4. Design should consider visibility of proposed structure to neighboring properties as well as potential impact on adjacent properties' critical areas.

2.1.4. HARDSCAPE

Hardscape, including but not limited to driveways, guest parking, walkways, amenity areas, and parking lots, should complement the site and buildings to provide continuity with the surrounding vegetation.

For hardscape installation or replacement, plans must be submitted to KICA for review and approval before construction. The intent is to ensure drainage of roads and/or rights-of-way are not negatively impacted by construction and follow the development plan for stormwater conveyance within the respective right-of-way.

2.1.4.1. DRIVEWAYS

1. Each lot or parcel may have only one (1) driveway access from the street. Curvilinear driveways are preferred as these add informality and screen direct views toward garage openings. Driveway elements (i.e., garage backout area, parking, etc.) must be screened from the street and adjacent properties. Straight-shot driveways are discouraged.

2. Where the driveway meets the street, the width of the driveway should be at least eighteen (18) feet. Driveways must be designed and constructed in a manner that will not interfere with and/or block street drainage. See *5.4. DRIVEWAY-STREET DETAIL* for more information.
3. Driveway width should be a minimum of twelve (12) feet on curves and ten (10) feet for straighter segments. Curved driveways should have a radius of at least fifteen (15) feet.
4. No driveway may be located closer than five (5) feet from side property lines.
5. A minimum width of three (3) feet for planting areas should be maintained between the driveway and the building.
6. Garage backout area should be a minimum of twenty-eight (28) feet from the garage doors, or the outermost foundation wall or column where garage doors are recessed, to the edge of paving. Where garage doors are recessed, structural elements such as walls or columns in front of garage doors should be considered when accounting for the maneuverability of vehicles.
7. Driveway functionality and garage access are the sole responsibility of the property owner's design team. Driveways must meet fire department access requirements.
8. Where site conditions allow, pervious driveways are preferred. As material availability changes over time, specific proposed material and finish should be identified at the time of review. As the intent is for hardscape areas to recede into the landscape, light-colored or attention-getting materials will not be approved. Approved types of materials include, but are not limited to, the following:
    a. Gravel (dark-colored aggregate rock between ¼" and ½") contained with steel edging. Edging should not be located above grade.
    b. Pervious pavers with recessed spacer bars that are hidden by aggregate
    c. Pervious concrete or pervious asphalt
    d. Brick
    e. Concrete with an exposed aggregate, salt void, or tabby finish
    f. Other materials that are subdued and natural in tone.

    Grass or reinforced turf systems are not permitted, except in limited applications such as a fire truck turnaround area or high-use right-of-way parking area.

    For information on the benefits of pervious paving systems, see the Conservancy of the Sea Islands' *Nature-Based Solutions Manual for Kiawah Island*.
9. A four (4) inch PVC conduit (Schedule 40) is required under the driveway in the area of the right-of-way, three (3) feet from the edge of the street, with an invert eighteen (18) inches below grade. The conduit should extend twenty-four (24) inches beyond both sides of the driveway and be capped at both ends. See *3.2.4. FINAL REVIEW* for more information.
10. KICA requires hard surface material, which may be pervious, in the right-of-way between the property line and street.
11. Driveways and other hardscape located within a right-of-way or easement may be subject to removal if infrastructure repair is needed. If removal is required, the property owner may be responsible for replacement.
12. For multi-family and commercial properties, vehicular access and circulation requirements are considerably more complex than those on homesites.
    a. More than one curb cut per parcel is considered a variance and will be evaluated as such for larger parcels.
    b. Service drives, loading areas, and dumpster areas shall be located away from primary building frontages and architecturally screened.

c. Shared access between adjacent commercial parcels should be considered.

2.1.4.2. PARKING

Thoughtful site planning, the preservation of existing trees, and generous interior and perimeter planting should be used to soften the visual impact of parking areas and paving, and to maintain the character of the surrounding area.

A. SINGLE-FAMILY AND PATIO HOMES

Guest parking must be a minimum depth of eighteen (18) feet and a minimum width of seventeen (17) feet to accommodate two (2) vehicles. Where site conditions warrant, guest parking spaces may be separated.

1. For single-family lots, the ARB discourages the use of more than two (2) required guest parking spaces; however, some neighborhood covenants may require additional spaces.

   Guest parking should be designed such that it is an integral part of the entry experience.

   Where area under a structure can accommodate one or both required guest parking spaces, and when the massing of the home is appropriate for the site, the ARB may consider a variance to waive the requirement for external surface parking on the lot.
2. For patio homes, two (2) parking spaces shall be provided on the property, which are allowed to encroach upon the front setback.

   The parking area should be disguised, if possible, with a carport, walls, or natural-looking bermed landscaping. Garaging for parking is not required.

B. MULTI-FAMILY AND COMMERCIAL

The goal for multi-family and commercial properties is for paving and parked cars to recede into the landscape rather than dominate it. Pedestrian movement from parking areas to buildings should be considered from the beginning of site layout.

1. Parking should be located to the side or rear of buildings whenever possible.
2. Large parking areas should be divided into smaller courts separated by planted islands or medians rather than presented as a single continuous field of paving.
3. Existing or new landscape material shall be of sufficient size and density to screen parking areas from neighboring properties at the time of installation.
4. Landscape islands within parking areas shall be sized to support a canopy tree at maturity.
5. Existing trees preserved within a parking area receive credit toward required plantings. Preservation is preferred to replacement.
6. Commercial parking requirements are established by the TOKI zoning ordinance based on the use and floor area of the building. Parking in excess of the Town's minimum is discouraged.

2.1.4.3. WALKWAYS

A. SINGLE-FAMILY AND PATIO HOMES

1. The primary walkway to the front entrance should be at least fifty-four (54) inches wide.
2. Secondary walkways should be no more than forty-two (42) inches wide and five (5) feet from a foundation to allow adequate space for foundation plantings.
3. All walkways should be located at least five (5) feet from property lines.
4. Secondary walkways should be of a dark blending color and should not be visible from

streets or adjacent properties.

B. MULTI-FAMILY AND COMMERCIAL

1. Pedestrian routes from parking areas to building entrances should be defined by a change in paving material, a raised walk, or a planted edge.
2. Accessible entries should be thoughtfully integrated into the entry layout.
3. Primary walkways serving multi-family and commercial buildings should be a minimum of six (6) feet wide.
4. Bicycle parking and connections to the leisure trail system should be provided where the property adjoins or is near the trail network.

2.1.4.4. FENCES AND GATES

1. Solid fences or walls, where allowed, should be located within the building setbacks and integrated with the architecture.
2. Open fences must be located a minimum of ten (10) feet from property lines and be located outside of stormwater filter buffers (typically 15' from marsh or lagoon edges), whichever is more restrictive. Fence enclosure areas should be limited to a portion of the side or rear yard, in order to allow the blending of landscaping with neighboring properties. Fence layout should relate to the architecture and not follow the property line nor impact existing trees.

   For lots with side and rear setbacks ten (10) feet or less from the property lines, fences may be located five (5) feet from a rear or side property line, provided there is sufficient evergreen landscaping between the fence and property line.
3. Maximum fence height, including lights and post caps, shall not exceed five (5) feet unless required by other authorities for utility uses.
4. Overly elaborate fence and gate designs, including spiked pickets, are not allowed. Instead, fences should be of a simple design and of a dark color, such as aluminum picket or dark-stained wood and wire living fence. No permanent chain link or similar fencing is allowed except if needed on a utility tract.
5. In all cases, fences should be heavily screened on the exterior with continuous evergreen shrub landscaping of a size and density to substantially shield and soften the impact of the fence for its entire length and height at the time of installation. Yards abutting golf courses are required to maintain two layers of evergreen shrubs between the fence and property line.
6. For single-family and patio home lots, entry gates or piers are discouraged. When allowed, they must not be visible to the street or neighboring properties, shall be located within the buildable area, and may not exceed five (5) in height. In the case of flag lots, gates or piers must be aligned with the buildable area of adjoining properties.
7. For townhome, multi-family, or commercial properties outside the main gate of Kiawah Island, entry gates are allowed. They should be located at the appropriate distance from the main street such that two vehicles may be waiting to enter without impacting the flow of traffic on the main street.

2.1.4.5. AMENITY AREAS

1. Amenity areas such as putting greens, sports courts, play structures, outdoor living areas that include permanent elements, or other similar amenities, must be approved by the ARB, located within the buildable area, count towards primary lot coverage regardless of material, and be screened with evergreen landscaping from neighboring properties and streets.

2. Passive amenity areas, such as at-grade seating areas, must be at least ten (10) feet from property lines and be located outside of stormwater filter buffers (typically 15' from marsh or lagoon edges), whichever is more restrictive. They shall be screened with evergreen landscaping from neighboring properties.
3. Noise factors and disturbances to neighbors should be considered in determining the position of amenity areas and structures.
4. Evergreen landscaping shall screen amenity areas from neighboring properties.
5. The ARB requires that structures associated with amenity areas be of a color that blends in appearance with the surrounding environment. At its discretion, the ARB may require additional evergreen landscaping to screen such elements.
6. Play structures such as fixed basketball hoops and similar elements in driveway areas are not allowed unless fully screened from view of the street and neighboring properties. Portable basketball hoops and the like are allowed in driveways during active play and must be stored out of view when not in use.
7. Patio home side yard: The primary side yard is the most private area of a patio lot and should be incorporated into the design of the residence as an amenity. In keeping with the concept of a patio home, the side yard should be treated as an outdoor living extension of the house itself, and not simply as storage or unusable space.
    a. Walls, fences, and screens should be used to design exterior spaces as a continuation of the patio wall concept and may align with the side setback of the lot.
    b. Landscape is an integral part of the development of patio lots that complements the architectural design. Adequate landscape must be used to furnish the outdoor living spaces and to anchor the home and patio wall within the natural surroundings.

       Plants should be used to furnish these spaces and enhance the home's appearance. Foundation planting is required along the entire perimeter of the patio home, including within the patio wall easement.
    c. The adjoining property owner may also plant within the patio wall easement.

A. ACCESSORY ELEMENTS

1. When allowed, any landscape accessory elements over three (3) feet tall should be located within the buildable area and screened from the view of neighboring properties. Substantial evergreen landscape screening may be required if existing vegetation does not provide adequate screening.
2. The ARB discourages the use of fountains, arbors, decorative garden walls, sculptures, or other yard art. If approved, such items must be included in the lot coverage calculations as primary coverage and be screened from adjacent properties.

2.1.5. SOFTSCAPE

Softscape, including but not limited to trees, shrubs, lawns, and groundcover, should complement the building and provide continuity between it and the surrounding vegetation. Softscape shall be planted so that there is not an unplanted area greater than one hundred (100) square feet.

Approval of a landscape plan is conditional, pending a field review of the in-place installation. At that time, additional landscaping may be required to reduce the visual height of a tall structure, to provide erosion control, to add additional screening, to correct damage from construction activity, or for other reasons as deemed appropriate by the ARB.

1. Architects and landscape architects should incorporate the existing natural vegetation into their plans and add to it in such a way as to produce a feeling of modest cultivation that blurs the line

between man-made elements and the natural environment. Property lines should disappear with the use of continuous landscaping.

2. The use of native flowering trees, shrubs, perennials, and annuals is encouraged. The extent and complexity of landscaping will depend upon the unique features offered by the site, the property owner's desires, the architectural design, the nature of existing vegetation, and the configuration of the property.
3. Care should be used in the selection of plants and flowers for size, salt-tolerance, drought-tolerance, and wildlife-resistance.

   For additional information and resources on native plant species, see TOKI's *Native Plant Database* and the Conservancy of the Sea Islands' *Native Plant Guide*.
4. Landscape plans may not indicate the use of invasive species listed in the US Department of Agriculture's revised 2003 *Nonnative Invasive Plants of Southern Forests: A Field Guide for Identification and Control*. These species must be removed during site development if they exist on the property.
5. Landscape fabric is not permitted due to its potential to be exposed to view and negative impact on soil health.
6. Softscape planted within a right-of-way or easement may be subject to removal if infrastructure repair is needed. If removal is required, the property owner may be responsible for replacement.
7. For lots abutting golf courses, multilayered evergreen buffers are required along shared property lines in order to create privacy. Additional softscape may be needed to supplement existing vegetation in order to screen lots from the adjoining golf course. Discreet and curving pedestrian mulch paths from a rear yard to the golf course will be considered upon request.

2.1.5.1. TREES

All properties on Kiawah Island are subject to the following tree count, preservation, removal, and replacement guidelines. Compliance with the minimum tree count requirements below does not grant the property owner the right to clear existing trees without ARB approval.

A. MINIMUM TREE COUNT REQUIREMENTS

For a developed lot, the minimum tree count requirements are one (1) tree of three (3) inches DBH or greater caliper per 1,000 SF of gross lot area (palms count as one-third (1/3) of a tree) *and* seventy percent (70%) of existing trees on the lot. Additionally, each lot must contain a minimum number of healthy trees of an approved type as described below:

1. A minimum of two-thirds (2/3) of the trees proposed as part of the development of a lot must be native species (Oak, Magnolia, Hickory, Palmetto, etc.).
2. All trees required to meet the minimum tree count requirements must be native species and a minimum of 4" caliper. If Palms are used for mitigation, they must be refoliated.
3. Chinese Tallow/Popcorn trees may not be included in the count of existing trees, as they are an invasive species and shall be removed during the development of a lot.

B. TREE PRESERVATION, REMOVAL, AND REPLACEMENT

1. It is encouraged that all Oak, large Pine, Magnolia, and Palmetto trees be saved, including, when possible, those inside the buildable area. Should any Oak or other specimen tree fall within the building footprint approved by the ARB, then the ARB, in its discretion, may require replacement by way of Oaks or other trees. The preferred species of replacement trees shall be native species such as Oak, Magnolia, Hickory, or Palmetto.
2. All Oak trees sixteen (16) inches DBH and greater must be preserved unless the ARB

determines there is no reasonable design solution that would save the tree(s). For every Oak tree with a caliper of sixteen (16) inches DBH and greater that is removed, the property owner may be required to plant trees for which the total caliper is equal to or greater than the total caliper of the trees removed. Mitigation trees shall measure a minimum of six (6) inches DBH.

3. For approved site development where Live Oaks sixteen (16) inches DBH and greater caliper are located within ten (10) feet of the foundation, the following requirements apply:
    a. A bridged foundation in lieu of a continuous footing, especially in cases where there is more than twenty-five percent (25%) root impact.
    b. Hand excavation to confirm major root position prior to installation of foundation elements.
    c. Foundations may not impact more than fifty percent (50%) of a Live Oak's critical root zone or be located closer than 10' to a Live Oak trunk (measured in the field, as field conditions may differ from survey data).
    d. Pre-treatment by a certified arborist may be required when construction commences, and additional treatment may be required at the conclusion of construction, especially if a variance is granted due to the location of the tree.
    e. Existing grades within the sensitive root zone of the Oak must be maintained. If at a lower elevation than surrounding grade, a yard inlet may be required to drain water runoff.
    f. Tree protection fencing should protect major root areas. In unique circumstances, ARB will consider the use of tree protection mats if access through the sensitive root zone area is required.
4. The removal of any tree, except Chinese Tallow/Popcorn trees, or any area of understory vegetation without notification to and approval by the ARB is prohibited. A certified arborist must be consulted on, and ARB approval obtained before, the removal of limbs that are six (6) inches and greater in diameter.
5. Maintenance or approved view pruning may not exceed more than 30% of a tree canopy.
6. Depending upon the number of trees removed and the landscaping planned by the property owner, the requirement of replacement trees may be waived or, in the ARB's discretion, other plant material and/or shrubs may be substituted where visually appropriate.
7. In exercising its discretion with respect to these standards and guidelines, the ARB shall take into consideration, among other factors, the number and species of trees removed; any hardship to the property owner; the remaining trees, shrubs, and other plant species existing on the lot; any additional plantings proposed as part of the landscape plan; the size, shape, and topography of the lot; the size, species, and value of proposed replacement trees; the characteristics of the neighborhood, including its general topography, existing tree canopy, and plant species; and other relevant factors.
8. The ARB may consider brief delays in installation due to severe weather conditions that may adversely impact the health of installed material.

2.1.5.2. SHRUBS

1. Foundation plantings must be at least half the height of the foundation as measured from the finish grade to the first habitable floor, or four (4) feet tall, whichever is greater, and encompass the entire building. The ARB may require larger plantings to help soften tall foundations. Buildings on a larger scale may require more substantial plantings, including trees, as foundation

plantings.

2. In unique circumstances, either due to the site or the architectural style, foundation plantings may be located away from the foundation wall, provided that the intent of a double layer of evergreen buffer plantings between the building and neighboring properties or street is met.
3. Straight-line plantings in the form of hedges along the front property line are discouraged unless part of an overall neighborhood landscape plan.
4. Planting beds near side property lines must be planted in an informal manner and blend with adjoining properties in both plant material and design. Native species are encouraged along these edges.
5. For larger properties, or adjoining lots owned by the same property owner, formal landscaping should be limited to the buildable area and included in secondary lot coverage calculations.
6. The use of native plants throughout is recommended to reduce irrigation needs and support native habitat.
7. For single-family and patio lots, fifty percent (50%) of all shrubs installed must be a minimum size of seven (7) gallons. The remaining installed shrubs must be a minimum size of three (3) gallons.
8. For townhome, multi-family, or commercial properties, all shrubs must be a minimum size of seven (7) gallons or larger, as needed to settle the building into the landscape at the time of installation.

2.1.5.3. LAWNS, GROUNDCOVER, AND MULCH

1. Lawns should be minimal in size and, except when located in the right-of-way, be internal to the site, and located a minimum of ten (10) feet from property lines and outside of stormwater filter buffers (typically 15' from marsh or lagoon edges), whichever is more restrictive. Lawns should be heavily screened with evergreen landscaping.
2. Natural grass lawns must be sodded as opposed to seeded or sprigged.
3. For combined lots, or adjoined lots owned by the same property owner, formal landscaping or sodded areas should be limited to the buildable area and included in secondary lot coverage calculations.
4. Artificial turf is an allowed material for lawns, contingent upon ARB review and approval of submitted samples, and shall count towards secondary lot coverage unless it is used for a putting green or similar recreational use, in which case it shall count towards primary lot coverage. Artificial turf is not allowed in rights-of-way or where visible to neighboring properties.
5. Groundcover is encouraged in shaded areas where it is difficult to grow grass.
6. Mulch is required so there is no exposed bare dirt on the site. Acceptable mulch material includes pine straw and hardwood bark of natural coloration. Gravel and artificial or brightly colored mulch are not allowed.
7. Roadside rights-of-way and areas of nearby lots that are damaged or disturbed during construction must be returned to their original condition.
8. For townhome, multi-family, and commercial properties, a greater size allowance for lawns will be considered if needed to support the program elements of the proposed development.

2.1.5.4. IRRIGATION REQUIREMENTS

Due to the rapid drying rate of Kiawah Island's sandy soil, irrigation systems must be installed to sustain the initial landscape planting.

1. Drip irrigation is required in non-sodded areas as it will also reduce maintenance and improve the appearance of the property. Spray irrigation should only be used to water areas of sod.

2. ARB highly encourages moisture-sensing devices for water conservation.
3. The ARB may require the use of rain sensor gauges on irrigation systems.

2.1.5.5. LANDSCAPE LIGHTING

All exterior landscape lighting shall be installed so as not to disturb neighbors or impair the vision of traffic on nearby streets. No fixtures should be directed toward surrounding structures, golf courses, waterways, or land masses. Because each design and site is unique, lighting plans will be evaluated based on the unique characteristics of the site. The ARB has discretion to disallow plans that introduce excessive lighting into the landscape.

The following standards and guidelines apply to all properties:

1. Landscape plans must indicate all proposed exterior landscape lighting. Discreet, low-voltage, hooded, and high-quality metal fixtures are required.
2. Exterior lighting should be limited to areas where there will be pedestrian movement and should be turned off when not in use. Motion-sensor lighting is not allowed.
3. Lighting must be located fully within the property lines and is not allowed within street rights-of-way.
4. Path lights should be used only in places of pedestrian movement and not along driveways. Down lights in trees may be used to provide ambient light in motor courts and entryways.
5. Exterior lighting towards or near the marsh is strongly discouraged. Only dim, low-mounted walkway lighting shall be allowed in these sensitive areas.
6. Landscape lighting, especially up-lighting of trees, should be limited in scope as it is intended to accent a truly unique or special natural feature.
7. Lighting on front beach buildings must be carefully selected so as not to interfere with the Loggerhead Turtles during nesting and hatching season (May 1 – October 31). Lights may not shine directly toward the beach, as these disorient the newly hatched turtles.
8. In addition, the following apply to multi-family and commercial properties:
    a. Site lighting shall be shielded and directed downward. Fixtures and poles shall be dark in color.
    b. Exterior lighting shall be the minimum required for safety and egress. Building-mounted floodlights are not permitted.
    c. Motion-sensor lighting may be approved where required for security, provided that they do not negatively impact neighboring properties.
    d. Fixtures shall be consistent with the materials, scale, and detailing of the building.
    e. Wall wash lighting of architectural elements is not permitted.

2.2. ARCHITECTURE

Kiawah's most outstanding feature is its natural beauty. The architectural design concept for Kiawah Island is that buildings and structures should respond to unique features of the site, be generally unobtrusive in form, material, color, and complement their natural setting. No particular period styles, design motifs, foreign or geographic influences, or historical approaches are endorsed or encouraged, unless specifically noted in the neighborhood supplemental guidelines. Inventive architectural solutions responding to unique site conditions are encouraged.

Building design should only be considered after extensive site information has been collected and site development concepts have been formulated, giving due consideration to neighboring properties. These

restrictions and the site analysis data form a basis for the beginning of site development concepts, and consider the following:

1. While buildings may incorporate each property owner's preferences, thoughtful care as to scale and mass, as represented by height, size, form, and articulation, is paramount.
2. Thoughtfulness must be exercised when developing a concept for site utilization. The best access to the site, as shown in the site analysis, should be the beginning of vehicular circulation areas, including but not limited to driveways, parking, garaging, and backout areas.
3. In order for a lot's development to accommodate fire department access requirements, careful evaluation of existing vegetation should occur before determining the proper site access.
4. In some instances, access may be required to share ingress/egress to a collector street for a limited distance with the adjacent property owner(s).
5. Buildings should be organized to take advantage of site conditions, with particular attention given to entry and arrival, active and passive areas, and service needs. Circulation patterns should be resolved as well.
6. Emphasis on lush, green vegetation will be accomplished by property owners developing landscape strategies geared to preserve, feature, and enhance the natural vegetation.

2.2.1. RESIDENTIAL

Residential properties on Kiawah Island conveyed to individual buyers are subject to extensive deed restrictions and architectural covenants designed to establish strict control of land use and ensure that all residences are attractive and appropriate to their neighborhood. Successful residential design solutions are those in which it is difficult to distinguish between elements that are a part of the building and those that are a part of the landscape design.

2.2.1.1. SINGLE-FAMILY

The design and construction of single-family homes on Kiawah Island are unique in that they must balance often highly custom features and preferences distinctive to each property owner while simultaneously being responsive to onsite conditions, as well as the broader neighborhood context. These standards and guidelines should be used to successfully integrate these requirements into a thoughtful solution that enhances the neighborhood and the property owner's use of their lot. Aspects of privacy and views, program and natural features, form and vegetation, and materials and light should all aspire to balance and harmony.

Many single-family neighborhoods have supplemental guidelines in addition to DWN, including but not limited to the following:

Glossy Ibis
Indigo Park
Marsh and Club Cottages (Marsh Cottage, Club Cottage, and Osprey Cottage Lanes)
Ocean Park
Rhett's Bluff and *Rhett's Bluff - Phase 2C*
Summer Island and Cormorant Island
Terrapin Island
The Preserve
The Settlement

If applicable to the property, the property owner, architect, and landscape architect should obtain the current neighborhood supplemental guidelines from the ARB website or office.

2.2.1.2. PATIO HOMES

Residential lots shown on recorded plats on which a patio wall is designated or subject to the patio home covenants are referred to as *patio lots*. The patio home emphasizes an indoor-outdoor use relationship, full utilization of the site for living purposes, and must utilize a patio wall as designated or prescribed on the plat and/or in the recorded covenants. Architects are encouraged to optimize the private garden-court character of the patio home where the patio wall enclosure is employed to provide privacy and obtain a maximum utilization of living space. Interior spaces should be arranged in such a manner as to allow them to flow into private outdoor spaces.

2.2.1.3. TOWNHOMES AND MULTI-FAMILY

Townhomes and larger multi-family buildings typically have larger building footprints and considerably more massing than single-family and patio homes. It is imperative, therefore, that these building types incorporate design strategies that soften their visual impact while maintaining the functionality required by a greater density of residents and visitors.

Thoughtful composition of building forms, material applications, and landscaping should be explored during the design process in order to settle buildings into their natural setting. Design solutions should be appropriate to the building type. While townhomes may incorporate a greater preference for individual expression, multi-family buildings may benefit from more aesthetic continuity accentuated by a palette of forms and materials.

Both townhome and multi-family buildings should be landscaped in such a way that frames important elements, such as a primary entrance, and screens lesser ones like utilities and service entrances. With greater impact to the site from infrastructure and hardscape elements, more care should be given to robust landscape screening strategies.

2.2.2. COMMERCIAL

Recognizing that planning, design, and construction requirements for commercial projects differ considerably from the low-intensity development across most of the Island, the design philosophy formulated within these standards and guidelines shall be applied with similar intent in order for commercial projects to be harmonious with the overall residential scale and aesthetic of Kiawah Island. Aspects of commercial projects that should be more thoughtfully considered include, but are not limited to, vehicular and pedestrian circulation, parking, service areas, mechanical and infrastructure elements, massing, signage, and landscaping.

Contact TOKI for specific building setback, lot coverage, building size, and building height requirements.

2.2.2.1. RETAIL

Successful retail projects on Kiawah Island must balance the need for visibility while settling into their landscape and neighborhood context. Retail architecture should carefully consider massing and scale, breaking down expression to individual uses through material applications and composition of forms and use of color. This should primarily be accomplished through the implementation of good architectural design, and less reliance on signage and lighting. Where appropriate, signage and lighting should complement the architecture of retail projects and always remain secondary to the building's aesthetic expression. Attention to detailing should be given a high priority in order to convey quality and craftsmanship. Integration of residential use with retail projects is encouraged.

2.2.2.2. HOSPITALITY AND RECREATION

Hospitality and recreational uses on Kiawah Island encompass a range of resort and private/property owner-oriented functions, including but not limited to hotels, clubhouses, pools, pavilions, sports courts,

golf courses, and associated support facilities. These should be designed with the same sensitivity to scale, form, and materials applied to other uses. Back-of-house and service areas of hospitality and recreational facilities should be designed to limit visibility from principal vantage points, be screened from nearby properties, and minimize disruption to vehicular circulation.

Because these uses often bridge public and private areas, careful attention to scale, materials, and form is essential to ensure they are appropriate in character. Parking areas associated with hospitality and recreational uses should be sited and screened to minimize their visual impact, supporting arrival experiences that are welcoming within the natural landscape. Special event set-ups at hospitality and recreation sites should be accommodated in a manner that does not compromise the day-to-day aesthetic or natural character of the surrounding area.

2.2.2.3. UTILITIES

Utility projects are essential to life on Kiawah Island and include, but are not limited to, wastewater treatment, potable water storage, emergency services, pump stations, cell towers, underground infrastructure, maintenance buildings, warehouse and storage facilities, and boat storage. New construction of utilities and improvements to existing facilities require ARB review and approval, as even necessary infrastructure includes an aesthetic component that must be considered within the Island's natural setting.

Wherever possible, utility structures and equipment should be screened from view through landscaping, siting, or architectural elements. Where screening is not feasible, materials and colors should be selected to blend with the surrounding landscape. The height of utility structures should be kept to a minimum, preferably below the tree line, and positioned to minimize exposure to roads, homes, and shared community spaces.

Underground infrastructure is subject to review for its related above-ground impact. Fencing around utility uses may be located as needed to secure the site, with thoughtfulness given to the location and fence design so that non-utility properties are not adversely impacted. Storage areas, whether indoor, outdoor, or conditioned, should be sited and screened with the same care applied to other utility structures.

2.2.3. EXISTING BUILDINGS

The primary purpose of the covenants and guidelines is to foster the creation of a community that is aesthetically pleasing and functionally convenient for all residents and visitors. These restrictions governing existing buildings require every property on the Island to be maintained in a manner conforming to these standards and guidelines.

2.2.3.1. NONCONFORMING CONDITIONS AND COMPLIANCE

Development on Kiawah Island, similar to other communities, has resulted in many of the Island’s earliest properties now having nonconforming conditions, such as building setback encroachments and lot coverage that exceeds allowable maximums. Additionally, non-compliant conditions can be and have been approved where strict adherence to the letter of the guidelines conflicts with the larger intent of DWN. In such cases, Variances have been granted to allow site and architectural design that responds to unique site conditions. Non-conforming conditions may be approved.

A. COMPLIANCE ENHANCEMENT

When considering alterations to an existing structure that has unapproved nonconforming conditions, the ARB strongly encourages greater compliance with these standards and guidelines whenever possible. Alterations should not increase the degree or severity of nonconforming conditions. At its

discretion, the ARB may require the elimination or reduction of nonconforming elements. Proposed alterations that would otherwise increase nonconformance may be offset by reducing or eliminating other existing elements in order not to exceed the nonconforming conditions.

The ARB may require existing nonconforming and unapproved site and architectural conditions be substantially reduced or eliminated for modifications that elevate the first habitable floor, require significant demolition of existing structure, or where preservation of existing encroachments impedes the development of optimal solutions or negatively impacts the resulting site and architectural design.

B. MASSING ALTERATIONS TO EXISTING SETBACK ENCROACHMENTS

The following method should be used as a guide for determining the approximate massing of varying types of structures when designing an alteration to an existing building with a building setback encroachment.

The factor for a proposed increase in massing where a building setback encroachment, having been previously approved by the ARB, currently exists is 1:2.5. Unapproved encroachments are not eligible for an increase in massing.

Example: To approximate the allowable footprint for the massing of a new roofed, one-story addition in the same location as an existing open raised deck encroaching into a building setback, divide the existing structure's area over the building setback by 2.5. The resulting area is the allowable footprint of the proposed increase in massing to replace the footprint of the open deck.

1000 SF = Area of existing open deck encroachment
1000 SF ÷ 2.5 = 400 SF
400 SF = Area of allowable roofed, one-story addition

The intent is to provide a means with which to evaluate the impact of a proposed increase in massing with the removal of an existing encroachment.

New variances to DWN criteria for alterations to existing buildings may be approved by the ARB to save prominent trees, minimize disruption to unique topography, to accommodate an irregularly shaped lot, or when the ARB determines in its sole discretion that a variance is otherwise appropriate to the property's development history and current site conditions. Variances should be clearly identified and should include a completed *Variance Request Form*. Insufficient information or an incomplete form may result in the disapproval of a variance request.

Approval of a variance is unique to the requested condition, is not precedent-setting, and is final and binding on all concerned. All new variances for alterations to existing buildings must comply with *1.4 VARIANCES*. Variance approval from TOKI may also be required, and ample time for TOKI BZA review requirements should be considered.

2.2.3.2. MAINTENANCE AND IMPROVEMENTS

No alteration, including constructive maintenance, painting, staining, or reroofing, affecting the exterior appearance of any building, structure, or landscape shall be made without prior approval of the ARB. A request for approval must be submitted to the ARB, including a completed review form, the review fee and deposit, and all drawings necessary to define the proposed scope of work. See the ARB *website* for current fees and deposits, or contact the ARB office for additional information. For accessibility modifications, the ARB reviews such alterations for aesthetic compliance only, considering factors such

as site organization, composition, form, materiality, color, etc.

Additional information, such as a landscape plan, material and color samples, site stakeout, etc., may be requested when appropriate. When approved, an ARB permit must be issued before commencement of any site clearing, material delivery, painting, or construction. Please note that the ARB will assess existing conditions that do not conform to current standards and guidelines and may require correction as part of the proposed work. See *2.2.3.1.A. COMPLIANCE ENHANCEMENT* for more information.

The ARB classifies work performed on existing buildings into three (3) categories. The following should be used as a guide when considering work to be done on an existing building or property.

A. MAINTENANCE

Maintenance is the repair, restoration, replacement in kind, preservation, upkeep, renewal, or refurbishment of an existing approved building or structure and includes, but is not limited to, the following: 1) foundation repairs, 2) repainting and restaining associated with repair, 3) stucco and brick repairs, 4) deck repairs and resealing, 5) roof repairs, 6) rescreening of porches, 7) door and window replacement to match remaining doors and windows, 8) rot repairs, and 9) driveway repair or replacement with no change to footprint or material.

Power washing is not considered maintenance and does not require an ARB permit.

B. IMPROVEMENTS

Improvements are modifications or alterations to existing properties and include, but are not limited to, the following: 1) screening of existing porches, 2) door and window additions, removals, or whole-building replacement, 3) whole-building repainting and restaining, 4) whole-building siding or roof replacement, 5) adding or enlarging mechanical stands, 6) minor landscape improvements (e.g., installing a rain garden, revising a fence location, altering or changing hardscape material or layout, and adding/changing landscape lighting), 7) dock/boardwalk/erosion control improvements, 8) minor alterations to the building footprint or conditioned area, 9) minor alterations to the roofscape or massing, 10) and pool and/or deck additions.

C. MAJOR IMPROVEMENTS

Major improvements include, but are not limited to, elevating the first habitable floor of a building, or substantial modifications or alterations to the overall footprint, height, scale, massing, or aesthetics of an existing building or structure. A major improvement may be subject to the full board-level review process and the requirements for a new building.

If added scope of work significantly changes the ARB permit type, additional review may be required. It is the responsibility of the property owner and their contractor to notify the ARB should maintenance and improvements expand beyond the permitted scope of work. Please contact ARB staff for further information and assistance with the classification of alterations.

In the event of a major island-wide natural disaster, see the *ARB Disaster Guidelines* for procedures related to expedited review and approval of repairs, alterations, and demolition of damaged buildings and structures.

2.2.3.3. LANDSCAPE MAINTENANCE, IMPROVEMENTS, AND TREE REMOVAL

Every property owner is responsible for preventing the development of any unclean, unsightly, or unkempt conditions of buildings or yards that would diminish the beauty of the neighborhood as a whole or a specific area.

Property owners are strongly encouraged to have their landscape professionals complete any major vegetative maintenance before or after bobcat denning season (April 1 – June 30). For more information about Kiawah Island's bobcats, please see TOKI's *bobcat webpage*.

C. MAINTENANCE

1. Formally landscaped beds and lawns must be maintained and screened from other properties. Return of such areas to a native state is encouraged and will be reviewed as a landscape improvement.

D. IMPROVEMENTS

1. Improvements to existing landscape require a landscape plan prepared and stamped by a SC licensed landscape architect. The addition of plants to an existing landscape may be performed by either a landscape architect or a landscape designer.
2. Any proposed alterations to landscaping, such as fences, fountains, lighting, play structures, driveways, walkways, landscape structures, and yard art, must be approved by the ARB. See *2.1.4.5.A. ACCESSORY ELEMENTS* for more information.

E. TREE REMOVALS

1. Tree removals, except Chinese Tallow/Popcorn trees, for existing developed properties will not be approved unless the tree is posing a threat to a property or persons, as determined by a certified arborist. A completed *Vegetation Removal Request Form* and review fee must be submitted to the ARB office. ARB staff will review the tree removal request and determine appropriate mitigation if required.
2. Any tree that is approved for removal will generally require mitigation with native hardwoods. Mitigation must be installed within ninety (90) days of approval. A deposit for tree removal will be required when mitigation is deemed necessary.
3. A property owner may be required to replace significant trees that die due to natural causes to ensure that the minimum tree count requirements for the lot are maintained.
4. In the event of a major island-wide natural disaster, see the *Kiawah Island ARB Disaster Guidelines* for procedures related to expedited tree removals.

See *2.2. LANDSCAPE* and *2.1.5.1.B. TREE PRESERVATION, REMOVAL, AND REPLACEMENT* guidelines for additional information and guidelines before planning landscape maintenance, improvements, and tree removals.

2.2.3.4. DEMOLITION OF EXISTING BUILDINGS

Demolition of existing buildings may be approved with the following guidelines being adhered to:

1. The demolition contractor will be required to hold a current business license with TOKI and should be insured and bonded. Membership in the *National Demolition Association* is encouraged.
2. Demolition work shall comply with the requirements in *4.3.7. DEMOLITION*.
3. Cleared areas must be neatly mulched and maintained. See *2.1.5.3. LAWNS, GROUNDCOVER, AND MULCH* for more information.
4. If naturalization is intended instead of redevelopment, a revegetation plan must be submitted.
5. Demolition proposed as part of a new building under active ARB review may be applied for after preliminary approval. Revegetation of the site access and any needed vegetated buffer enhancement of the site must be completed within three (3) months if:

a. the review process is abandoned or delayed for more than six (6) months following the last ARB approval, or
b. construction is abandoned or delayed more than 6 months from the issuance of an ARB permit.

Full naturalization of a site may be required by the ARB if construction does not commence within 6 months of an ARB permit.

6. For redevelopment of lots after demolition, the minimum number of trees shall comply with the original number of trees on the lot at the time of its initial development; provided, however, the ARB may require additional trees depending on the existing tree canopy and topography of the lot at the time of redevelopment and/or reduce or eliminate the requirement for additional trees.

See *3.3.4. DEMOLITION REVIEW* for submittal requirements.

2.2.4. BUILDING SETBACKS AND EASEMENTS

Building setbacks are dimensioned from the property line or the BCM critical line, whichever is most restrictive. Setbacks may be specified on the subdivision plat, recorded deeds and/or covenants. For setback information on specific properties, please refer to the *ARB Setback Table* online or contact the ARB office if a setback graphic is referenced.

The ARB will establish setbacks in the creation of new parcels, either by combination or subdivision, in order to support preservation of unique natural features and neighborhood context. **It is imperative that the property owner and/or** design team **obtain from the ARB a reading on specific setbacks before proceeding to the conceptual stage**.

A. BUILDABLE AREA

Building setbacks, and sometimes easements, delineate the buildable area, that portion of a lot upon which a house may be constructed. This area is sometimes specified on the subdivision plat and on specific exhibits attached to recorded deeds or homeowners association covenants. The following items are to be located fully within the buildable area:

1. The building footprint, including but not limited to all enclosed areas, porches, elevated decks, cantilevered floors, covered areas such as roof overhangs greater than twenty-four (24) inches in depth, and stairs.
2. Detached and semi-detached ancillary structures.
3. Mechanical stands and platforms, either freestanding or cantilevered, for HVAC equipment, generators, pool equipment, etc.
4. Pools and pool equipment.
5. Recreational amenities such as putting greens, sports courts, and other similar recreational amenities.
6. Yard art elements over three (3) feet tall.

B. LIMITED BUILDABLE AREA

Depending on unique site conditions, lots may be designated with a limited buildable area that allows for secondary structural elements to be constructed beyond the standard buildable area, provided vegetated buffers along sensitive property lines are preserved. **As applicable, refer to the deed, neighborhood covenants, and/or supplemental guidelines for relevant limited buildable area restrictions.** Development in the non-buildable areas will generally include only access ways such as driveways, walkways, boardwalks, or, in a few instances, boat dock entries.

For Patio Homes I and II categories, building setback and easement areas are outlined below:

Patio Homes 1

Zero Property Line	3' Setback to Patio Wall
Adjoining Zero Property Line	7' Easement
Front	20' Easement
Wooded Area	10' Easement
Wooded Area	10' Easement (rear)
Golf Course	30' Easement (rear)
Lagoon	30' Easement (rear)
Marsh	30' Easement (rear)

Patio Homes II

Zero Property Line	3' Setback to Patio Wall
Adjoining Zero Property Line	12' Easement
Front	25' Easement
Wooded Area	15' Easement
Wooded Area	15' Easement (rear)
Golf Course	30' Easement (rear)
Lagoon	30' Easement (rear)
Marsh	30' Easement (rear)

All enclosed conditioned areas of the patio home must be located within the buildable area as defined by the building setbacks.

2.2.5. LOT COVERAGE

Lot coverage is calculated by dividing the area of proposed development by the total high ground area (see *5.1 DEFINITIONS*) of a property. Development coverage is classified as either primary or secondary lot coverage. Allowable lot coverage percentages for primary and secondary elements are outlined in the following table:

ALLOWABLE LOT COVERAGE BY HIGH GROUND AREA (SF) OF LOT			
HIGH GROUND AREA	*PRIMARY*	*SECONDARY*	*TOTAL*
Less than 8,000 SF	50.00 %	5.00 %	55.00 %
8,000 to <12,000 SF	40.00 %	6.00 %	46.00 %
12,000 SF or greater	33.00 %	6.67 %	39.67 %

A. PRIMARY LOT COVERAGE

Elements included in primary lot coverage are characterized as being required and/or impervious in nature. The following elements shall be included in the primary lot coverage calculations:

1. The building footprint, including but not limited to porches, elevated decks, cantilevered floors, covered areas such as roof overhangs greater than twenty-four (24) inches in depth, and stairs.
2. Required hardscape elements (i.e., driveway, garage backout area, and parking spaces) made of impervious or pervious materials. See *2.1.4.1. DRIVEWAYS* for minimum requirements.
3. The primary walkway leading to the front entry, made of impervious or pervious material.
4. Masonry retaining walls of any height and wood retaining walls more than thirty-six (36) inches in height.
5. Contained areas raised thirty-six (36) inches or more from the existing grade. See *5.1 DEFINITIONS*.
6. Amenity areas and elements, including arbors, pools, putting greens, firepits, fountains, sports courts, and any at-grade impervious areas or walkways, should all be included in primary lot coverage.
7. Mechanical stands and platforms, either freestanding or cantilevered, for HVAC equipment, generators, pool equipment, etc. Where equipment is mounted to the side of a building and

open to below, the equipment footprint shall be included.

8. Where a closed-loop geothermal system is proposed, an allowance for an appropriately sized mechanical stand or cantilevered platform shall be included as primary lot coverage, and a location reserved within the buildable area should the geothermal system not be installed.
9. For patio homes, the primary lot coverage percentage is limited to fifty percent (50%) of the high ground area of the patio lot.

B. SECONDARY LOT COVERAGE

Elements included in secondary lot coverage are characterized as not being required and pervious in nature. The following elements shall be included in secondary lot coverage calculations:

1. Pervious secondary walkways, boardwalks, and pervious at-grade patios all within thirty (30) inches of the existing grade.
2. Contained areas less than thirty-six (36) inches above the existing grade.
3. Uncontained areas thirty-six (36) inches or more above the existing grade. See *5.1 DEFINITIONS*.
4. Hardscape elements set in a pervious manner that are not required.
5. For patio homes, secondary lot coverage of five percent (5%) is allowed for a total lot coverage of fifty-five percent (55%) of the high ground of the patio lot.

These, along with the primary lot coverage elements, may not exceed the total allowable lot coverage of a lot based on its total high ground area.

In the case of flag lots, the entry access, or pole area, of the flag lot and primary elements within it may be excluded from calculations for the lot coverage percentage. See *5.3. LOT COVERAGE GRAPHIC* for more information.

2.2.6. BUILDING SIZE

Building size is determined by many factors including but not limited to zoning ordinances, ARB setbacks, lot location, trees, neighboring buildings, and other factors that affect the site. The ARB may, at its discretion, disapprove a submittal that is inappropriate for the site, regardless of the maximum allowed conditioned area.

The recorded covenants, Contract of Sale, recorded plat(s), and/or deed to a lot stipulate the minimum and/or maximum conditioned area that may be enclosed in a building constructed on a lot. These minimums and maximums are intended to ensure discreet structures that consider unique site conditions. The minimum size of the first floor for some buildings (also set forth in such documents) may be regulated by the ARB.

In determining building size for ARB review, the following criteria should be used:

1. The layout of conditioned and unconditioned (screened and covered) areas shall be measured from the outside face of exterior walls for each level, including stairs and mezzanines.
2. For area calculations of unconditioned spaces, measure from the centerline of walls that separate conditioned and unconditioned spaces.
3. Vaulted spaces that are open to below shall be calculated at fifty percent (50%) of the potential floor area.
4. Stair areas shall be calculated at one hundred percent (100%) for each floor.
5. Where a third-floor level is allowed, the conditioned area shall be no greater than half of the area of the largest floor below.

6. Attic areas that may accommodate a minimum ceiling height of six feet-eight inches (6'-8") or include an egress-sized window and are accessible other than by a ladder shall be included in conditioned area calculations.
7. For patio homes, the size of the enclosed dwelling area is usually defined in the recorded deed. Except in rare circumstances, the first floor of a patio home may not occupy in excess of forty percent (40%) of the entire area of the patio lot.

Larger-sized buildings may require upgrades to existing water and sewer systems. Contact Kiawah Island Utility (KIU) to confirm line sizes.

2.2.7. BUILDING HEIGHT

TOKI zoning ordinance establishes the base building height elevation (BBHE). The ARB uses BBHE for determining maximum building height. See *5.1 DEFINITIONS* for additional details on BBHE and maximum building height.

Recorded covenants and supplemental guidelines for some neighborhoods may provide for a different means of determining maximum building height. As applicable, refer to the lot's neighborhood covenants and supplemental guidelines for relevant height standards. The architect shall verify and coordinate all maximum building height restrictions with the ARB, TOKI, and FEMA.

1. The building height of homes should generally be from one (1) to three (3) stories in height, forty (40) feet for residences, with taller designs to receive approval from the ARB before preliminary review. Particular attention should be given to the first-floor elevation required by Federal flood regulations adopted by TOKI.
2. For patio homes, building height is restricted to two (2) floors of enclosed living space and a maximum building height of forty (40) feet from BBHE.
3. For multi-family and commercial buildings, contact the ARB for guidance on applicable height restrictions for ARB review. Additionally, see the TOKI zoning ordinance for its maximum building height limits on these buildings.

See *5.1. DEFINITIONS* for *base building height elevation*, *building height*, *minimum first finished floor elevation*, *natural ground*, and *ground floor level*.

2.2.8. BUILDING FORM

The form of buildings should be a carefully planned addition to the natural setting and embrace its site.

1. Building forms should provide interest and be compatible with neighbors. Large structures can be made to appear smaller and smaller ones made to appear larger by the manipulation of shapes and massing, and by the effective use of decks, carports, garages, and screened porches.
2. Extreme care shall be taken to shape the building around specimen trees and groves of smaller trees. Uniquely configured buildings and/or decks may be useful to save trees twelve (12) inches DBH and greater.
3. Roof forms should complement the design of the building, for integration with the tree canopy.
4. Patio Homes: The form of a patio home must relate to the existing natural features, to the goal of creating indoor-outdoor living spaces, and to neighboring patio homes. The mass of a patio home should be broken down into smaller elements, allowing for the interplay of patios, decks, screened porches, and courtyards. The roofscape must relate to the tree canopy and neighboring buildings and may be extended to cover a garage or carport.

   The main architectural element of every patio home is the patio wall. The design criteria for the patio wall require more imaginative thinking than simply a straight wall or fence. Its purpose is to enclose outdoor space for use as an extension of the living area.

a. The patio wall shall be constructed simultaneously with a patio home and located so that the exterior of the same is three (3) feet inside of and parallel to the designated property lines on the recorded subdivision plat. The wall may be located elsewhere on the lot with ARB approval.
b. Patio walls on the front may turn inward to form a service or entry court, or connect to the patio wall of the adjoining property to provide continuity in the streetscape. Walls on the rear may not necessarily turn if they would block views from the patio home or the adjacent patio home.
c. When lots do not adjoin a golf course, lagoon, or marsh, a rear-enclosing wall may extend to and along the rear property line, irrespective of the building setback requirement, to allow the property owner maximum use of their property.
d. The patio wall must be solid, with no openings that allow for potential views into neighboring lots, and should be constructed of materials that blend with the home. Variety is encouraged in the use of materials, design, detailing, and textures.
e. The patio wall height must be six (6) to eight (8) feet above the natural ground (grade) and/or adjacent floor level. Taller extensions of the patio wall will be required in areas to prevent views from second-story windows into adjoining lots.
f. The patio wall length may extend to within ten (10) feet of the front property line (unless other setbacks are appropriate as determined by the ARB).
g. Property owners of adjoining lots may, with approval, construct a common party wall provided it meets the requirements of all applicable building codes as to height and fire rating.

2.2.9. ARTICULATION

The aesthetic appearance of a building or structure depends greatly upon the complementary articulation of many architectural elements such as roofing, siding, fenestration, and details.

1. Fenestration should be selected and located to provide a composed exterior appearance, and for views, light, privacy, and natural ventilation.
    a. Doors and windows must be compatible with the architecture of the building and detailed with mullions that adequately simulate the appearance of separate panes of glass where divisions are proposed. Between-glass window grills are not allowed.
    b. Decorative glass for windows and doors is generally discouraged. If proposed, details and elevations must be submitted for review.
    c. Windows in garages should be kept to a minimum in both size and number, utilizing higher windowsills sufficient to reduce the visibility of stored vehicles from neighboring properties and streets.
2. Walls, fences, and architectural screens should be used to provide privacy, enclose service yards and HVAC equipment, and reduce the scale of large massing. Trash containers should comply with TOKI and KICA regulations.
3. Spiral stairs located on the exterior of buildings are discouraged. When allowed, spiral stairs shall be integrated with the architecture or obscured from view with an architectural screen.
4. Detailing of fascia and soffits; wall bases, corners, and friezes; doors, windows, and openings; and decks and porches should have common elements that help unify the appearance.
5. Chimney hoods or pots are required to screen flue caps and/or spark arresters. Gas fireplaces and/or similar appliances that require venting to the exterior shall have through-roof vents concealed within a chase that simulates a traditional chimney. Through-wall vents are strongly discouraged. Where necessary, such vents should be designed as architectural elements or be

screened from view.

6. Louvers or lattice at foundations and gables should be detailed using substantial materials that indicate form and depth. Unless deemed architecturally appropriate, elevated buildings, including decks and stairs, must have either louvers or lattice between structural elements below to screen utilitarian functions such as parking, storage, crawlspaces, and other unfinished areas.
7. Skylights and light tubes are rarely approved. When allowed, these must be tinted to avoid nighttime glow and may only be located where not directly viewed from neighboring properties or primary view corridors.
8. Shutters should be consistent from elevation to elevation as applicable and must appear to be dimensionally operational and equipped with appropriate hardware.
9. Columns should be proportionally consistent with the style of the building. Columns greater than one (1) story in height are generally considered inconsistent with the architectural context of the Island.
10. Solar panels may be incorporated into the roofscape or installed on an ancillary structure, provided views are screened from neighboring properties. When approved, solar panels are to be installed using a low-profile rack-mounting system and shall appear integral to the overall roof design, taking into consideration form, materiality, and color. The use of roof wells, parapets, and other building elements to screen solar panels is strongly encouraged. Roof materials with integrated photovoltaics will be considered on a case-by-case basis.
11. Exposed piping is discouraged, but where necessary, it must be painted to match the adjacent material color and screened with evergreen landscaping or an architectural screen.
12. Mechanical stands and platforms, either freestanding or cantilevered, should be designed so that their appearance is integrated with the architecture in their height, detailing, materials, and color.
13. Electric meters must match the adjacent color to which they are mounted and be screened with evergreen landscaping.
14. Finials and other decorative roof elements must be approved in advance of installation.
15. Patio home articulation determines the usability and enjoyment of this type of residence as well as its exterior appearance.
    a. Living space should be arranged to preserve existing natural features and to allow indoor space to open out into courtyards, patios, and decks.
    b. Fenestration should be designed to optimize the use of the surrounding private exterior space and provide for views, natural light, and ventilation.
    c. Walls, fences, and screens should be used to continue the concept of the house throughout the lot.
    d. Complementary details should be used throughout to ensure architectural compatibility.

2.2.10. MATERIALS AND COLORS

All exterior materials and colors should complement the surrounding environment.

1. The use of natural wood, stucco, brick, and metals is encouraged, while the use of imitation or lower-quality materials is discouraged. There is a distinct preference by the ARB for transparent and semi-transparent stains so as to blend with the natural surroundings.
2. Lighter color palettes may require additional layers of evergreen landscaping to nestle the building into the natural environment. If additional layers of evergreen landscaping are not possible, darker color palettes will be required.
3. Materials and colors will be evaluated by the ARB during the review process through the submittal of renderings, sample boards, and an onsite material and color mock-up in advance of

painting, staining, and installation of finish materials.

4. For neighborhoods with supplemental guidelines, refer to the requirements in those guidelines.

To encourage blending with natural vegetation, the ARB's Value Finder (see *5.1 DEFINITIONS*) should be used to gauge acceptable ranges of color value on proposed finish materials. Colors may have a different value depending on the material to which they are applied. The Value Finder may be obtained from the ARB office for use in evaluating selections for the material and color sample board required at final review, the onsite material and color mock-up for new construction, and repainting as part of maintenance or improvements to existing buildings.

The following information should be used as a guide for selecting exterior finishes:

A. ROOFING

1. Roof materials shall be wood shakes or shingles, fiberglass shingles, slate, tile, or standing seam metal. In the case of fiberglass shingles, these shall be of a high-quality architectural-grade shake style.

   All other proposed roofing materials shall be held to a similar standard of quality.
2. Vents and similar elements penetrating roofs should be painted, or of an elevated material, to blend with the roof color and located away from the front elevation and other prominent or highly visible sides of the building.

B. SIDING

1. Siding materials should have a matte finish. The use of garish and overly bright colors is uniformly prohibited.
2. Applications that utilize a combination of siding materials (e.g., lap siding and shingles, etc.) should have the materials applied in such a manner that relates to and articulates the overall massing hierarchy and composition of the building.
3. For the body of the building, the lightest acceptable value for stucco and wood siding is a value of three (3).
4. Thin cementitious clapboard or shingle siding must be at least a value of five (5).
5. Thicker and/or heavily textured manufactured siding may have a value of four (4).
6. The use of plywood siding is never allowed except where historically approved in specific cottage neighborhoods.
7. Vents and similar elements penetrating walls should be painted, or of an elevated material, to blend with the wall color and located away from the front elevation and other prominent or highly visible sides of the building.

C. TRIM

1. Trim color should be applied to door and window trim, fascia, soffits, columns, balustrades, and pedestrian doors only.
2. Trim around garage doors may be the primary trim color only if the design of the garage doors is fully integrated with the architecture. Sufficiency of integration must be determined in writing at the time of evaluation during the review process.
3. Unless otherwise approved in writing, corner trim elements and bay window projections are to be painted or stained the same as the body color of the building.
4. Bandboards around the body of the building may be either the siding color or foundation color, as most appropriate. Contrasting trim color may be applied to bandboards at porches and decks or in very limited situations deemed appropriate by the ARB.

5. The lightest acceptable value for trim must be at least zero (0).
6. The trim and siding colors must have a value difference of three (3) or less, where the trim color is lighter than the siding color. Where trim is darker than the siding, contrast may exceed three (3) values with approval from the ARB.

   Siding materials that will naturally weather to a lighter value over time may have a greater contrast than the trim at the initial installation, provided that the siding will be allowed to lighten to within three (3) values or less.
7. Soffits and porch ceilings with a contrasting finish (painted or stained) must have a value difference of three (3) or less to the adjacent trim color. Frieze boards below soffits of a contrasting finish should be painted to match the siding color.
8. Large areas of trim-dominant detailing may be required to be darker in color.

D. FENESTRATION

1. Door and window colors should be uniform around the building and may not be lighter than a value of zero (0).
2. Front doors may be of a unique design, color, and of high-quality material to signify importance, but should also be in keeping with the building's overall aesthetic and color palette. Door products that convincingly simulate authentic wood siding materials in texture, dimensionality, and application may be used with prior approval by the ARB. Other doors of a unique design will be considered by the ARB on a case-by-case basis.
3. In unique cases where composition, massing, and/or materiality indicate, doors or windows in such instances may differ in color but should complement and harmonize with the overall color palette.
4. All foundation fenestration and trim, including garage doors, pedestrian doors, and louvers, should match the foundation or adjacent siding color or be of a non-contrasting color. Garage doors may be fabricated of a high-quality wood and stained a darker color than the foundation color or adjacent siding.

E. DECKS AND TERRACES

1. Decks may be finished with natural hardwoods, treated pine, thermally modified wood products, and some composite decking products. Decking materials should be natural in appearance and harmonize with a building's color palette. Decking materials that appear unnatural will not be approved.

   Please contact the ARB office for a current list of approved and unapproved decking materials, or to request ARB review for appropriateness of other decking materials.
2. Terraces may be finished with masonry materials such as brick, stone pavers, or similar materials that are subdued and natural in appearance. Light-colored or attention-getting finish materials are discouraged.

F. FOUNDATIONS

1. Buildings with masonry foundations should have a mid- to dark coloration to settle them into the landscape.
2. Tabby-finished stucco foundations should have a mid-value coloration for the finish coat and a low-contrast shell mix.
3. For brick foundations, vibrant and brightly colored bricks are not allowed. Mortar color may blend with the brick or be lighter in contrast. Dark mortar is rarely approved unless it matches the brick and is never approved with lighter colored bricks.

4. Stone foundations may be allowed by the ARB provided that they are harmonious with the surrounding landscape.
5. Foundations that utilize a combination of finish materials (e.g., stucco and brick, etc.) should have the materials applied in such a manner that relates to and articulates the overall massing hierarchy and composition of the building.

G. ACCESSORY ELEMENTS

1. Shutters may be of a complementary color, either darker or lighter than the primary siding color, but must have a value difference of three (3) or less if lighter.
2. Exterior exposed pool finishes shall not be garish or overly bright.
3. Gutter and downspout colors must match the surface to which they are attached, except when copper or other similar high-quality material, or a finish that simulates such a material (e.g., a bronze finish).
4. Chimney elements such as hoods, pots, and trim shall not be garish or overly bright and should harmonize with the material and color of the chimney itself.
5. Flashing should match the color of adjacent materials unless copper or other similar high-quality material is used.
6. Railings should be consistent with the overall architectural style of a building. Railings are preferred to blend with a building's siding or be dark in coloration when expressed as a dominant feature. Glass railings are discouraged and will not be approved unless appropriate to the architectural style, and their reflectivity is minimized.

2.2.11. SERVICE AND UTILITY ELEMENTS

1. Every property should have an enclosed service area. Homesite and townhome enclosures should be suitable for trash containers, bicycles, etc. Circulation patterns should be taken into consideration when designing to avoid conflicts between visitors, service yards, and the like.
2. HVAC equipment, water heaters, generators, above-ground propane tanks, and similar equipment must be screened from view with an architectural screen shown on elevations, and shall not encroach upon setbacks, inclusive of screening.

   Should adequate architectural screening not be properly planned, designed, and installed, the ARB, at its discretion, may require correction.
3. Noise-generating exterior equipment, including but not limited to chillers, generators, pool equipment, and HVAC equipment, must be baffled using both barrier and absorption components.
4. Insect abatement systems should not be visible.
5. Clotheslines are not allowed.
6. For patio homes, with their compact lot size, the careful location of support facilities is critical.
   a. An adequately enclosed service yard is required by the General Covenants and should be accessible from the kitchen and parking area.
   b. HVAC equipment and electric meters must be screened from view and may not be placed on the back of the patio wall. Through-wall vents may not be located on the patio wall.
   c. A separate trash enclosure must be included if not provided in the service yard.
7. For multi-family and commercial properties, the following also apply:
   a. Multi-family and commercial uses should account for dumpsters as well as food and beverage exterior storage.
   b. Architectural screening is required for all mechanical, electrical, and plumbing equipment

that is external to the building, inclusive of rooftop installations.

c. Equipment that must remain accessible should be painted to blend with the landscape or the building.

See *2.2.13. APPURTENANCES* for additional information.

2.2.12. ARCHITECTURAL LIGHTING

All exterior architectural lighting shall be installed so as not to disturb neighbors or impair the vision of traffic on nearby streets. No building lights should be directed toward surrounding structures, golf courses, waterways, or land masses. Additional standards and guidelines are as follows:

1. The source of exterior electric lights must be shielded. Only gas lanterns are allowed to have their illuminating source visible.
2. Floodlights are discouraged. A maximum of two (2) switched floodlights, or similar types of lighting attached to soffits and fascias, when allowed, must be hooded, low-voltage, located at a first-floor eave or similar location, and approved in advance.
3. Lighting on front beach buildings must be carefully selected so as not to interfere with the Loggerhead Turtles during nesting and hatching season (May 1 – October 31). Lights may not shine directly toward the beach, as these disorient the newly hatched turtles.
4. Wall-wash lighting is not permitted.
5. Fixed outdoor light-producing equipment (i.e., televisions, projection devices, etc.) should be internal to the site, screened from neighboring properties, and turned off when not in use.
6. Multi-family and commercial lighting shall additionally adhere to the following:
    a. Buildings should be perceived at night primarily by their architecture (i.e., form, massing, materials, etc.), and not by the lighting applied to them.
    b. Warm color temperature light sources are preferred. Bright cooler lights, color-changing lighting, projection lighting, animated lighting, and flashing or intensity-changing lighting are not allowed.
    c. Exterior lighting shall be kept to the minimum required for safety and egress.
    d. Fixtures should be suitable for the environment on Kiawah Island, have muted non-reflective finishes, and be harmonious with the scale, materiality, and aesthetic of the building.
    e. Interior lighting adjacent to storefront and other large expanses of glazing shall be minimal so that these areas do not appear as dominant elements on the building.

Because each design and site is unique, lighting plans will be evaluated based on the unique characteristics of the site and architecture. The ARB has discretion to disallow plans that introduce excessive lighting to the environment.

2.2.13. APPURTENANCES

All exterior alterations to a structure or site require approval from the ARB. The following are specific guidelines for the design or alteration of appurtenances.

2.2.13.1. MAILBOXES

1. Single-family and patio homes are required to have a standard mailbox with the appropriate lot number or assigned street number routed into the crosspiece. The property owner's name may be applied to the side of the mailbox per an approved design detail. The design, color, construction, and installation of every mailbox must conform to Kiawah Island Graphic Controls for mailboxes. See *5.8. STANDARD MAILBOX* for more information.

2. Mail and package collection/distribution areas and associated equipment for multi-family and commercial properties should be integrated with the program and architecture in a manner that is discreet, functional, and convenient for users.

2.2.13.2. SIGNAGE

Allowed signage must conform to the Kiawah Island Master Sign Plan or be approved as a campus-wide signage design for distinct properties. The use of any sign for identification, renting, or selling of a property is prohibited. Limited temporary signage for golf tournaments or other Island events must be approved in advance and removed within twenty-four (24) hours of the event's conclusion.

1. Single-family and patio homes signage:
    a. Homes may only be identified by the graphics included on the mailbox as specified by the graphic controls included in the Appendix.
    b. Property owners' names, house names, and street numbers shall not be placed on the front of the home or on signs placed on lots except where historically approved in specific cottage neighborhoods.
2. Multi-family and commercial signage:
    a. For retail properties, storefront and window signage must be approved by the ARB.
    b. Logos and brand identification signage may be allowed if graphically appropriate and integrated with the architecture.
    c. Sign illumination shall conform to the Kiawah Island Master Sign Plan.
    d. For utility properties, signage required by other regulatory agencies is allowed.

Installation of all signage is subject to final inspection by ARB staff.

2.2.13.3. RECREATIONAL EQUIPMENT AND VEHICLES

The storage of personal watercraft, boats, and campers in yards or driveways is prohibited and instead shall be stored out of sight in garages, below houses, or at offsite facilities.

2.2.13.4. BOARDWALKS

The dune field along the beach serves as a trail system for island wildlife and evolves constantly. Therefore, all boardwalks must be designed so as not to impede the circulation of wildlife or the natural progression of the dunes.

All boardwalks and integrated decks must be staked out, maintaining a three (3) foot setback from all property lines, before on-site review by the ARB. Clearing for stakeout, construction, or views may not occur without prior approval by the ARB.

A. ARTICULATION

Construction of new or alteration of existing boardwalks must be approved by the ARB and comply with the following:

1. Landward of the BCM setback line, the boardwalk should be maintained at a level near the existing grade, allowing a one-foot clearance between the bottom of the structure and the top of the dune on all private property and within the KICA conservation zone. Seaward of the BCM setback line, the boardwalk should be maintained twenty-four (24) inches from the existing grade or as required to meet BCM regulations.
2. Railings are discouraged except when required by building codes. Boardwalks should follow a natural path through vegetation and across the dune field, avoiding dune crests where possible.

3. Single-family residential boardwalks may be a maximum of five (5) feet wide and must be shore-perpendicular at their beach terminus. Stairs, ramps, or a combination will be considered as needed to reach the beach within ten (10) feet from the toe of the primary dune.
4. When a stair layout is necessary, a narrow ramp adjacent to stairs may be considered for bikes, provided that total width does not exceed five (5) feet.
5. High-use boardwalks, such as those connected to a KICA leisure trail, or as part of a multi-family or commercial property, may be a maximum of five (5) feet wide and may be shore-parallel if needed to create a ramped access to the beach. Stairs, ramps, or a combination will be considered as needed to reach the beach within ten (10) feet from the toe of the primary dune.
6. Depending on the unique characteristics of each site, a small deck measuring twelve (12) feet by twelve (12) feet maximum may be allowed landward of the property line, and a low bench without a seat back may be located on the deck. The deck must be located within natural dune valleys and may require landscape screening using indigenous plants. Some sites may be configured such that no seating area is allowed. Any storage must be integral to the design of the bench and deck.

B. LIGHTING

Boardwalk lighting may consist only of low-profile shielded luminaries and shall be positioned so that the beach is not illuminated. To accomplish this, the following is required:

1. Neither the light fixture nor the light it emits may be viewed from the beach.
2. Lights shall be turned off after 9:00 pm from May 1 to October 31 of each year, so as not to interfere with turtle nesting or hatching.
3. Televisions and other similar illuminating items (additionally, speakers of any kind) shall not be installed on boardwalks.

C. SIGNAGE

Signage on boardwalks is discouraged. When allowed, the following shall apply:

1. A maximum of one (1) sign may be installed if not seen from the active beach.
2. Post sign boards should be a minimum 8” x 2” with 1” letters and may be a maximum 12” x 3” with 1 ½” letters.
3. Approved verbiage is “Private” or “No Trespassing” and must be routed in block letters.
4. If plank signage integral to the boardwalk is used, it must be located on the flat portion of the boardwalk, not on ramps or stairs.

2.2.13.5. TRANSMISSION DEVICES

Placement of transmission devices (i.e., satellite receivers, antennas, weather stations, etc.) requires ARB review and approval before installation. Such equipment is discouraged on roofs and prominent locations and should be installed in attics or behind architectural screens.

If roof placement is necessary, the location shall be in areas that are least obtrusive. The equipment should be minimal in size, not visible from the street, and properly screened from nearby properties.

If ground placement is necessary, the location shall be in areas least obtrusive, such as service yards or well-screened areas of the landscape, with minimal views from streets or nearby properties. The device must be painted a color that will blend with the surrounding roof or landscape.

2.2.13.6. STORM PROTECTION

Installation of storm protection systems for doors and windows requires review and approval by the ARB.

1. All elements of the system must match the color of the surface to which they are attached and should integrate with the architecture of the building.
2. The ARB encourages the use of removable panels and hinged shutters where applicable.
3. Storm protection systems may only be utilized when the Island is in imminent danger due to a Hurricane Warning by the *National Weather Service*.
4. Systems must be removed or disengaged immediately after the warning is removed and may not be used as a means of securing property during property owner absences.

2.2.13.7. DOCKS

Installation and alteration of all docks at critical areas requires BCM, ARB, and TOKI approval. Please refer to the TOKI *Key Dock Location Map*.

1. Dock structures should be fabricated with natural and blending materials; however, aluminum gangways are allowable. Wood materials may not be painted or stained.
2. Pile-mounted and drive-on floating boat lifts may be used only at properties designated as Floating Dock and Shared Floating Dock Sites per the TOKI Key Dock Location Map. Boat lifts are not allowed at Fixed Dock sites.
3. Drive-on floating boat lifts are preferred to pile-mounted boat lifts at floating docks. Provided there is no pile-mounted boat lift, two (2) slips per floating dock location and four (4) slips per joint floating dock location, i.e., two (2) per joint property owner, are permissible.
4. Pile-mounted boat lifts, when allowed, should be minimal in form and are limited to one (1) per floating dock location or two (2) total (one for each property owner) per joint floating dock location.
5. Covered pierheads are limited to community docks.

2.2.13.8. POOLS

Pool installation and modifications require ARB approval and must be performed by a licensed pool contractor in keeping with the following:

1. The pool cavity and elevated deck must be entirely within the buildable area and included in lot coverage calculations.
2. The proximity of tree canopies should be carefully considered when determining pool placement, as requests for tree removals due to leaf debris will not be approved.
3. At-grade decks and patios, along with fencing, associated with in-ground pools must be at least ten (10) feet from the property line or marsh and lagoon edges, whichever is more restrictive, and heavily screened with evergreen landscaping.
4. The color of pool elements, including but not limited to vertical surfaces at the waterline and infinity edge troughs that are visible from nearby lots, must be approved by the ARB before installation.
5. Saltwater pools are strongly encouraged, as potential discharge from traditionally chlorinated pools into the Island's stormwater system will adversely affect the environment.
6. Hot tubs and spas shall be integrated into decks and patios and screened from neighboring views.
7. Pool equipment should be located within the buildable area, counted as primary lot coverage, and architecturally screened.
8. Fencing, gates, or covers needed to secure the pool should be considered and approved by the

ARB before installation.

2.2.13.9. VIEW STANDS

View stands may be erected within the buildable area of undeveloped lots. Notification to construct a view stand should be sent to ARB with submittal of a plat or tree survey, noting the location, along with pedestrian access to the stand.

Return to top of section.

Return to Table of Contents.

3. REVIEW PROCESS

3.1. DESCRIPTION OF THE PROCESS

The ARB reviews all new construction, exterior improvements, and maintenance proposed on Kiawah Island for high-quality architectural design and characteristics appropriate to the surroundings, the special conditions of climate, and other environmental factors indigenous to the area through an organized review process that is systematic and uniform.

3.1.1. AESTHETIC OBJECTIVES

Architects and landscape architects should strive to develop a strong sense of identity within a framework of visual continuity that creates an attractive and harmonious addition to the community.

Aesthetic issues considered by the ARB range from the scale of the site down to fenestration details. These may include, but are not limited to, neighborhood compatibility, site relationships, and design consistency. Evolution of neighborhood characteristics will be considered during the review of the proposed building's materials, style, colors, mass, height, and conditioned area. The existing vegetation, tree canopy, root systems, and existing grade will be considered during the review of building mass and site development. Window style, pattern and division, detailing, and overall proportion will be reviewed for consistency with the proposed architectural style.

It is not the intention of this ARB to stifle creativity in producing a strong identity, provided the design conforms to the recorded covenants and these standards and guidelines. However, through its review process, the ARB may disapprove any proposed construction on purely aesthetic grounds where, in its sole judgment, such action is required to protect the enduring natural beauty and attractiveness of an area.

3.1.2. ARB MEETINGS

The ARB generally meets on the first (1st) and third (3rd) Wednesday of every month, or more often if the caseload dictates. During the meetings, the ARB reviews new construction submittals and substantial major improvements to existing structures, considers variance requests and due diligence matters, and hears appeals from property owners and design and construction professionals. Agenda items and appointments may be arranged by contacting the ARB office at (843) 768-3419 or *ARB@Kiawah.com*.

3.1.3. ARB STAFF

The ARB staff shall assist property owners, architects, landscape architects, builders, and other professionals with the review of the design, construction, and alteration of buildings on Kiawah Island. ARB staff are available to promptly reply to questions and advise on meeting the objectives of these standards and guidelines.

Every project will be previewed by ARB staff before conceptual, preliminary, and final review by the ARB members. ARB staff will also review stakeouts and submittals for acceptable construction documents, specifications, landscaping plans, material and color samples, and make recommendations to the ARB members on the appropriateness or inappropriateness of a proposal.

ARB staff will not present a project to the ARB for review unless all submittal requirements are satisfied.

3.1.4. SUBMITTALS

Submittals to the ARB for new construction and major improvements to existing buildings must be made by an architect registered in the State of South Carolina and having a current TOKI business license. Required drawings and submittal forms must receive conceptual and preliminary approval before

submitting for final review.

Conceptual review submittals are due no later than noon on the Wednesday before the scheduled ARB meeting. The ARB strongly encourages personal presentations of conceptual review submittals by architects, landscape architects, and property owners.

Preliminary and final review submittals are due by noon on the Friday before the scheduled ARB meeting. All requirements shall be completed, or the ARB may refuse to review a submittal.

In addition to standard submittal forms, all variance requests must be submitted on a completed *Variance Request Form* and clearly indicated on the drawings. All variances must be brought to the attention of the ARB during the review process. Only variances specifically approved in writing shall be considered granted and valid.

To be considered at an ARB meeting, submittals shall be accompanied by the appropriate ARB form and completed in full. For all submittals, drawings shall include the following:

1. The correct property address.
2. The review being requested (i.e., conceptual, preliminary, or final review).
3. North arrow on all site plans (architectural, grading and drainage, tree and understory protection, and landscape plan) and floor plans. Plans should be oriented with plan north to the top or left.
4. Graphic scale on site plans, floor plans, and elevations.
5. All text (i.e., labels, notes, callouts, dimensions, topographic contour lines, and spot elevations, etc.) shall be easily legible.
6. Elevation drawings should be legible and accurately illustrate design intent. Line weights and shading may be used to convey form, depth, and shadows but should not obscure other elements of the drawings.

Any review fees due must also be paid in full for a submittal to receive consideration for final approval.

3.1.5. APPROVALS AND PERMITS

All design approvals are valid for six (6) months from their date of issuance. Should a six (6) month approval period expire, resubmittal for reapproval is required before submitting for the next review.

An ARB permit may be issued only after final approval is granted by the ARB. The review process should begin early enough to obtain approval that coordinates with the construction schedule. All normal procedures set up by TOKI must be followed as well. No site clearing, material deliveries, or construction may begin without first obtaining an ARB permit.

If permitting for and construction of a project has not commenced within six (6) months of final approval, a resubmittal for final review is required.

3.2. NEW CONSTRUCTION REVIEW PROCESS AND SUBMITTAL REQUIREMENTS

3.2.1. SITE ANALYSIS

The site analysis is a critical first step in conveying to the ARB the characteristics of the site and the appropriateness of a proposed design.

The architect and landscape architect are required to attend site analysis meeting at the property with ARB staff before beginning the review process. The purpose of this meeting is to familiarize attendees

with the site; to evaluate the health and location of specimen trees, other vegetation, and existing topography; and to increase the property owner's and design team's awareness of ARB issues. This information should be represented graphically and sealed by the landscape architect on the site analysis drawings.

A digital submittal of a topographic and tree survey and all other pertinent site data must be submitted to the ARB staff before the site analysis meeting. The meeting shall be rescheduled if the submittal is not received in advance.

A. TOPOGRAPHIC AND TREE SURVEY

The topographic and tree survey for the property must be prepared by a South Carolina registered land surveyor and dated within twelve (12) months of its submittal. The survey must be at 1/8" = 1'-0" or 1" = 10'– 0" scale and is required to show the legal description of the property, including the following:

1. Recorded property lines, easements, and building setbacks.
2. The topographic contour lines of the lot, along with spot elevations for existing curbs, the street, and neighboring lot curbing.
3. The location, genus, and species of all Oak trees three (3) inches DBH and greater, and all other trees six (6) inches DBH and greater.
4. Any unique natural features of the site.
5. Driveways, walkways, garages, and roof heights of buildings on adjoining properties.
6. Current BCM critical line when applicable.
7. Utility locations.

The accuracy of surveys is extremely important as this will influence the design of the residence. Inaccuracies can often lead to significant delays and/or increased project costs if not addressed promptly. Survey error will not be considered a hardship in support of a variance.

When preparing the survey, surveying crews shall keep disturbance to existing vegetation and other site features to a minimum. Excessive disturbance may result in fines.

B. ANALYSIS OF SITE CONDITIONS

The analysis should be drawn on a copy of the topographic and tree survey and should include, but is not limited to, the following:

1. Oak trees twenty-four (24) inches DBH and greater, and highlighted in red.
2. All hardwood trees twelve (12) inches DBH and greater, and highlighted in green.
3. Areas and characteristics of natural or dense understory vegetation, including unique or unusual site features.
4. Existing Oak canopy delineated.
5. Locations of damaged or diseased trees.
6. Locations of trees restricted from removal with respective ground area delineated by shading or hatching. See *2.1.5.1.B. TREE PRESERVATION, REMOVAL, AND REPLACEMENT* guidelines for criteria.
7. Existing grading and drainage patterns.
8. Sun movement analysis and breeze directions.

C. PROPOSED SITE DEVELOPMENT

The proposed site development should be drawn on a copy of the topographic and tree survey and should include, but is not limited to, the following:

1. View orientation(s).
2. Major features on site and adjoining properties within twenty-five (25) feet of property lines.
3. Building footprint, including but not limited to porch, deck, and pool locations, with approximate area requirements.
4. Site access.
5. Areas requiring minimal and maximal privacy.

3.2.2. CONCEPTUAL REVIEW

As early as the property owner, architect, and landscape architect are able to identify design objectives, plans should be submitted for conceptual review. Schematic sketches, dimensioned drawings, models, and perspectives are most appropriate for conceptual submittals. These plans should consist of tentative drawings that reflect the general site organization, massing/form, spatial relations, materials, fenestration, articulation, and circulation patterns. Active involvement by the landscape architect is required during the initial layout of site plans. One (1) complete digital set of drawings is required. See the *Conceptual Submittal Checklist* available on the ARB website. The ARB staff will preview all submittals and will not present a project to the ARB for conceptual review unless the following are complete and legible.

A. CONCEPTUAL REVIEW FORM

The *Conceptual Review Form* must be completed in full, and the information on the form must correspond to information on the drawings, or the submission will be considered incomplete. A South Carolina licensed and registered architect and landscape architect must be listed on the form in the appropriate fields.

B. LETTER OF INTENT

The letter of intent shall include, but is not limited to, the following:

1. A description of the site with particular attention to unique characteristics, challenges, and opportunities.
2. A summary of how the proposed design addresses the above.
3. The identification, description, and reasoning for any variances that are being requested.

C. SITE PLAN

The site plan shall include the following:

1. The site plan shall be drawn by the landscape architect at a scale of 1” = 20’- 0”.
2. The site plan shall show the ground floor level plan of structures with dimensions demonstrating conformity with all required easements and building setbacks.
3. Surveyed trees, both those to be preserved and those to be removed, must be indicated.
4. Driveway, guest parking, garage backout area, walkways, and other at-grade hardscape with dimensions.
5. HVAC equipment or closed-loop geothermal fields, electric meter, and service yard, if applicable.
6. Show major features on adjoining properties within twenty-five (25) feet of the property line.
7. Provide lot coverage calculations per *2.2.5. LOT COVERAGE*.

D. PLANS

Floor plans and roof plan drawn at 1/8" scale depicting the layout of conditioned and unconditioned (screened and covered) areas with calculations as described in *2.2.6. BUILDING SIZE*. Plans for all proposed floor areas, including garages, ground floor level, or attics, must be included.

E. ELEVATIONS

The exterior elevations shall include the following:

1. Elevations drawn at 1/8" scale showing all exterior sides of the proposed structure.
2. Base flood elevation (BFE), base building height elevation (BBHE), minimum first finished floor elevation (MFFFE) and proposed first-floor elevation, maximum building height and proposed building height, interior floor levels, and existing and proposed finish grade.
3. For designs that include detached or semi-detached massing, submittals should include elevations between structures.
4. All materials, such as wood, stucco, and/or masonry elements of all exterior walls, shall be accurately and fully depicted.
5. The elevations may be rendered with shadows depicting roof and/or deck overhangs, and changes in wall plane or massing, but should not mask design elements beyond. The ARB, at its discretion, may require revised drawings if design intent is not graphically clear.
6. One sheet shall include all exterior sides of the proposed building at 1/8" scale.

F. PERSPECTIVES AND MODELS

Perspective sketches and models are encouraged at conceptual review, although not required.

After reviewing the project, the ARB will either grant conceptual approval or provide reasons for the rejection of the submittal and offer suggestions for improving the project. If the conceptual drawings include substantial changes, either by request from the ARB or the property owner, they must be resubmitted and receive conceptual approval before proceeding to preliminary review. Conceptual approval is valid for six (6) months from the date of issuance. All necessary forms are provided on the ARB website at *KiawahARB.com*.

3.2.3. PRELIMINARY REVIEW

The preliminary review submittal is prepared after conceptual approval, incorporating changes, if any, from review of the conceptual submittal. One (1) complete digital set of drawings is required. See the *Preliminary Submittal Checklist* available on the ARB website. The ARB staff will preview all submissions and will not present a project to the ARB for preliminary review unless the following are complete and legible.

A. PRELIMINARY REVIEW FORM

The *Preliminary Review Form* must be completed in full, and the information on the form must correspond to information on the drawings, or the submission will be considered incomplete. A South Carolina licensed and registered architect and landscape architect must be listed on the form in the appropriate fields.

B. RESPONSE TO COMMENTS

A written response to comments, if any, from the previous review should be submitted.

C. REVIEW FEE

This fee is for the review process. Please contact the ARB office for the most current review fee

schedule. See the ARB *website* for current fees, or contact the ARB office for additional information.

D. PRELIMINARY STAKEOUT

The building shall be staked out on the lot with stakes at least two (2) feet tall, marking all corners. A string shall connect all stakes outlining the shape of the building, including but not limited to porches and decks, stairs, raised planters, pools, all driveway elements, walkways, and at-grade seating areas. The deadline for completing the preliminary stakeout is noon on the Friday before the ARB meeting, or the submittal will not be reviewed.

E. SITE PLAN

The site plan shall include the following:

1. This plan must be 1/8" in scale, must include overall dimensions (depth and width) of the building, and must demonstrate conformity with all required easements and building setbacks.
2. The site plan must show the ground floor level plan.
3. Driveways, guest parking, garage backout area, and walkways must be located, appropriately dimensioned, and proposed materials specified.
4. Proposed driveway dimensions should include length, width, and radii.
5. HVAC equipment or closed-loop geothermal fields, electric meter, pool equipment, external wall-mounted equipment, and service yard, if applicable. In closed-loop HVAC systems, borehole locations must be shown on the site plan.
6. Any variances to the standards and guidelines must be clearly noted and highlighted.

F. LOT COVERAGE GRAPHIC

Provide a lot coverage graphic showing areas and measurements of all elements included in the calculations of the lot coverage, as well as any secondary pervious elements. See *5.3. LOT COVERAGE GRAPHIC* for an example.

G. TREE AND UNDERSTORY PROTECTION PLAN

The tree and understory protection plan shall include the following:

1. Drawn at a scale of 1" = 10' or 1/8" = 1' - 0" and includes the building setbacks.
2. Tree protection fencing should be located within ten (10) feet of the foundation wall unless there is a unique site or building condition that warrants a greater distance.
3. Site clearing limits as delineated by the tree protection fencing, trees proposed for removal, areas of dense understory vegetation, areas where existing vegetation is to be preserved, and areas where the existing grade will be disturbed must be noted.
4. Construction material storage, dumpster, and portable toilet locations must also be shown and should be located within the property lines.

H. GRADING AND DRAINAGE PLAN

The grading and drainage plan shall include the following:

1. Drawn at a scale of 1" = 10' or 1/8" = 1' - 0" and includes the building setbacks.
2. The roof plan.
3. Demonstrate that existing trees and vegetation to be preserved are not damaged by fill dirt.
4. Proposed grading showing existing roadside swale and flow patterns, if applicable, and demonstrate that drainage flow does not adversely impact nearby properties, roadside swales,

and that stormwater flow within the KICA easement will not be impeded.

5. Spot elevations at all building corners, the base of all stairs, garage doors, and other at-grade entrances.
6. Spot elevations for the top and bottom of planters, retaining walls, etc., if applicable.
7. Spot elevations for the driveway, including but not limited to regular intervals where it meets the property line and the street, the center of the driveway, and all corners of the driveway. See *5.4. DRIVEWAY-STREET DETAIL* for additional grading requirements.
8. The landscape architect must include a note on the grading and drainage plan for the builder that states: "*Final grading must be completed in such a way that it does not adversely affect drainage or vegetation on nearby properties or roadside swales.*"

Additional information may be requested in case of irregular conditions, including but not limited to nearby properties not in conformance with these standards and guidelines, existing drainage in disrepair, and atypical drainage patterns.

I. PLANS

Floor plans and roof plan drawn at 1/4" scale depicting the layout of conditioned and unconditioned (screened and covered) areas with calculations as described in *2.2.1.3. BUILDING SIZE*. Plans for all proposed floor areas, including garages, ground floor level, or attics, must be included.

J. ELEVATIONS

The elevations shall include the following:

1. Elevations at 1/4" scale showing all exterior sides of the proposed structure.
2. Base flood elevation (BFE), base building height elevation (BBHE), minimum first finished floor elevation (MFFFE) and proposed first-floor elevation, maximum building height and proposed building height, interior floor levels, and existing and proposed finish grade.
3. For designs that include detached or semi-detached massing, submittals should include elevations between structures.
4. Substantial portions of exterior walls that appear obliquely on elevations should also be shown orthogonally with either partial or full supplemental elevations.
5. All materials, such as wood, stucco, and masonry elements of all exterior walls, shall be accurately and fully depicted.
6. Gutters, leader heads, and downspouts must be shown if proposed, and will be reviewed as architectural elements similar to mechanical systems.
7. One sheet shall include all exterior sides of the proposed building at 1/8" scale.

K. BUILDING SITE SECTION

The building site section shall include the following:

1. Drawn to scale as necessary.
2. Base flood elevation (BFE), base building height elevation (BBHE), minimum first finished floor elevation (MFFFE) and proposed first-floor elevation, maximum building height and proposed building height, and existing and proposed finish grade.
3. Floor and ceiling heights of each habitable floor.

After reviewing the project, the ARB will either grant preliminary approval or provide reasons for the rejection of the submittal and offer suggestions for improving the project. If the preliminary drawings include substantial changes, either by request from the ARB or the applicant, they must be resubmitted

and receive preliminary approval before proceeding to final review. Preliminary approval is valid for six (6) months from the date of issuance. All necessary forms are provided on the ARB *website*.

Once preliminary approval has been issued by the ARB, applicants are encouraged to apply for TOKI zoning review. TOKI zoning submittals may require approval from the Town's BZA. Consult with TOKI staff for submittal requirements.

3.2.4. FINAL REVIEW

The final review submittal is prepared after preliminary approval, incorporating changes, if any, from review of the preliminary submittal. One (1) complete digital set of drawings is required. See the *Final Submittal Checklist* available on the ARB website. The ARB staff will preview all submissions and will not present a project to the ARB for final review unless the following are complete and legible.

A. FINAL REVIEW FORM

The *Final Review Form* must be completed in full, and the information on the form must correspond to information on the drawings, or the submission will be considered incomplete. A South Carolina licensed and registered architect and landscape architect must be listed on the form in the appropriate fields.

B. RESPONSE TO COMMENTS

A written response to comments, if any, from the previous review should be submitted.

C. FINAL STAKEOUT

If requested, the preliminary stakeout must be updated to reflect any changes in the location of the building footprint, driveway, walkways, or any additional trees to be removed.

D. SITE PLAN

Similar to preliminary review requirements, including any changes, proposed utility services, and the location of a four (4) inch PVC conduit.

E. LOT COVERAGE GRAPHIC

Similar to the preliminary review requirements, including any changes.

F. TREE AND UNDERSTORY PROTECTION PLAN

Similar to the preliminary review requirements, including any changes.

G. GRADING AND DRAINAGE PLAN

Similar to the preliminary review requirements, including any changes.

H. SCHEMATIC LANDSCAPE PLAN

A schematic landscape plan prepared by a South Carolina registered landscape architect showing the following:

1. Drawn to scale at 1/8" = 1'– 0" or 1" = 10'.
2. Location of the building, hardscape, and proposed landscaping concepts as intended to help integrate the building with its environment.
3. Representation of all planting material to scale, including existing trees to remain. Include a proposed plant schedule indicating size, quantity, common and scientific name, and variety.
4. Tree analysis chart showing minimum tree count requirements. Mitigation trees should be

shown and highlighted.

5. Location and details of landscape lighting with a complete light fixture schedule and cutsheets, walkways, fences, pools, decks, at-grade patios, play structures, and garden structures.
6. Adequate landscape screening for HVAC equipment, service yards, trash enclosures, and electric meters. Foundation plantings must be half the height of the foundation wall.
7. Height of mature vegetation proposed for location within deeded, platted, or implied view corridors (such as along side yard building setbacks on flag lots) must be noted.
8. Fence location and fence height, if desired or required for a pool.
9. Hardscape materials, design, and layout.

I. PLANS

Floor plans drawn at 1/4" scale depicting the layout of conditioned and unconditioned (screened and covered) areas with calculations as described in *2.2.6. BUILDING SIZE* and all information necessary for construction. Plans for all proposed floor areas, including garages, ground floor level, and attics, must be included as well as a roof plan. A foundation plan may be required to assess tree impact.

J. ELEVATIONS

Similar to preliminary submittal requirements. Additionally, submittals shall show all exterior mechanical, utility, and service equipment, to scale, with architectural screening shown in the same views. Omission of equipment and screening from the submittal constitutes a design change and must be submitted for ARB approval.

K. COLORED ELEVATIONS

Colored elevations of each side of the building must be submitted showing the proposed color application. The entire elevation must be rendered to ensure design elements that may require unique color application are considered to avoid color issues in the field.

L. MATERIAL AND COLOR SAMPLE BOARD

Because color is essential to the overall success of a building, and because color chips often vary greatly from actual applications on varying materials, the ARB requires colors and finishes to be submitted on actual samples of materials proposed for use on a single sample board. An image of the sample board should be included as part of the digital submission.

ARB review of samples submitted at the time of final review does not constitute final approval of the color palette. Final approval will only be given after review of the onsite material and color mock-up during construction. See *5.5. MATERIAL AND COLOR SAMPLE BOARD* for more information.

M. BUILDING SECTIONS

In addition to the preliminary building site section, building sections at 1/4" scale, as many as necessary, for clarification or construction.

N. ELECTRICAL PLANS

Plans at 1/4" scale showing necessary information, including but not limited to the location of exterior lighting, electric meter, HVAC equipment, generator, water heaters, and propane tanks.

O. DETAILS

Submit details, including but not limited to the following:

1. Typical wall section.
2. Exterior trim.
3. Door and window products, including colors, materials, and details.
4. Exterior walls, fences, or screens.
5. Railings and/or built-in seating.
6. Porch and screen porch sections.
7. Patio wall, as appropriate.
8. Architectural screening for HVAC equipment, generators, water heaters, pool equipment, propane tanks, rain barrels, and other similar items.
9. Exterior lighting fixtures meeting requirements of *2.2.12. ARCHITECTURAL LIGHTING*.

P. SPECIFICATIONS

A full set of specifications must be submitted that defines the quality of all work and materials. Specifications may be included in the drawings.

After reviewing the project, the ARB will either grant final approval or provide reasons for the rejection of the submittal and offer suggestions for improving the project. If the final drawings include substantial changes, either by request from the ARB or the applicant, they must be resubmitted and receive final approval before submitting for an ARB permit. Final approval is valid for six (6) months from the date of issuance. All necessary forms are provided on the ARB website.

3.3. EXISTING BUILDING REVIEW PROCESS AND SUBMITTAL REQUIREMENTS

These standards and guidelines require existing buildings on the Island to be maintained in a manner that fosters a community that is aesthetically pleasing for all residents and visitors. As stated in the General Covenants, *"no building, fence or other structure may be erected, placed, or altered nor shall a building permit for such improvement be applied for on any property in Kiawah Island until the proposed building plans, specifications, exterior color or finish, plot plan, landscape plan, and construction schedule shall have been approved in writing by the Company…"*

For property owners with regime or neighborhood association-managed properties, written approval of any exterior alterations by the appropriate regime or association must be included in submittals to the ARB for review. Contact information for such properties can be found online at *Regime Neighborhoods*.

When submitting for review of maintenance, improvements, and major improvements, submittals must include the appropriate information and documentation that sufficiently describes the proposed work as outlined below:

3.3.1. MAINTENANCE REVIEW

Maintenance consists of replacement-in-kind repairs of existing buildings. See *2.2.3.2.A. MAINTENANCE* for more information, and contact the ARB with questions about maintenance review, approval, and permitting. Maintenance reviews and permits may be requested by uploading submittals on Kiawah Island's *Online Permitting Portal*.

It is the responsibility of the property owner and their contractor to notify the ARB should replacement-in-kind repairs expand beyond the permitted scope of work or if additional work considered to be an

improvement or major improvement becomes necessary or desirable.

3.3.2. IMPROVEMENT REVIEW

Improvements require an increased level of review by ARB staff, as these typically include aesthetic alterations to a property. See *2.2.3.2.B. IMPROVEMENTS* for more information, and contact the ARB with questions about improvement review, approval, and permitting. Submittals for improvement reviews must include, when applicable, but are not limited to, the following:

A. IMPROVEMENT REVIEW FORM

The *Improvement Review Form* must be completed in full, and the information on the form must correspond to information on the drawings, or the submission will be considered incomplete.

B. DRAWINGS AND DOCUMENTATION

One (1) digital set of drawings and documentation shall be submitted that clearly defines and explains the proposed scope of work. Drawings shall be legible, to scale, and include, as applicable, but not limited to the following:

1. Photos and/or drawings of existing areas and elements of the building being improved.
2. Photos, specifications, and/or drawings of the proposed scope of work, products, materials, and finishes.

After reviewing the project, the ARB will either require changes or grant approval. To obtain an ARB permit after receiving review approval, see *4.2.1. ARB PERMIT*. An ARB permit and TOKI building permits must be displayed before site clearing, material delivery, or construction may begin.

It is the responsibility of the property owner and their contractor to notify the ARB should improvements expand beyond the permitted scope of work, or if additional work considered to be a major improvement becomes necessary or desirable.

3.3.3. MAJOR IMPROVEMENT REVIEW

A major improvement will be subject to the full review process, similar to that of a new building, should the proposed scope of work greatly change the overall height, scale, massing, or aesthetics of the building. Examples of major improvements that are candidates for the full review process include, but are not limited to, elevating the first habitable floor of a building to comply with FEMA flood requirements, adding additional stories to a building, significant expansion of the building footprint, and changing the architectural massing, fenestration, or style. See *2.2.3.2.C. MAJOR IMPROVEMENTS* for more information, and contact the ARB with questions about major improvement review, approval, and permitting.

Submittals that do not require the full review process must include, when applicable, but are not limited to, the following:

A. MAJOR IMPROVEMENT REVIEW FORM

The *Major Improvement Review Form* must be completed in full, and the information on the form must correspond to information on the drawings, or the submission will be considered incomplete. A South Carolina licensed and registered architect and landscape architect must be listed on the major improvement review form in the appropriate fields as applicable.

B. LETTER OF INTENT

The property owner or their representative shall inform the ARB as to the purpose of the proposed major improvement with a letter of intent.

C. AS-BUILT SURVEY

An as-built survey is required for any major improvement that alters the existing lot coverage of a property. At completion of the work, an updated as-built survey reflecting changes to the lot coverage must be submitted before the final ARB inspection. See *4.4.4. FINAL INSPECTION AT CONCLUSION OF CONSTRUCTION*. The as-built survey shall be dated within twelve (12) months of the submittal and include the following:

1. Legal description of the property.
2. Recorded property lines, easements, and building setbacks.
3. Current and prior BCM critical lines where applicable.
4. Footprint of all existing built elements on the property, pervious and impervious.
5. Conditioned area if there is a maximum.
6. Roof ridge height.
7. Lot coverage calculations, including primary and secondary coverage elements.

The ARB may require additional survey information on specific trees that appear to be impacted by proposed alterations.

D. DRAWINGS AND DOCUMENTATION

One (1) digital set of drawings shall be submitted that clearly defines and explains the proposed alterations. Drawings shall be legible, to scale, and include, as applicable, but not limited to the following:

1. Existing site plan, lot coverage graphic, floor and roof plans, and elevations.
2. Photos of all sides of the existing house.
3. Demolition site plan, floor and roof plan, and elevations.
4. Proposed site plan, lot coverage graphic, floor plans, roof plan, and elevations.
5. Tree and understory protection, grading and drainage, and landscape plans may be required depending upon the scope of work proposed.

See *3.1.4. SUBMITTALS* and *3.2.3. PRELIMINARY REVIEW* for more information on drawing submittal requirements.

E. REVIEW FEE

The major improvement review fee is determined by the ARB based on the scope of work. The fee shall be paid at the completion of the review process and before the issuance of an ARB permit. See the ARB *website* for current fees, or contact the ARB office for additional information.

F. MATERIAL AND COLOR SAMPLES

Samples are important for major improvement review because of the need for matching existing materials. When changing the color of a building, color samples must be applied to the structure for review by ARB staff. An *Onsite Color Review Form* must be completed and submitted to the ARB for review and approval. See *2.2.10. MATERIALS AND COLORS* for more information on material and color guidelines.

After reviewing the project, the ARB will either require changes or grant approval. To obtain an ARB permit after receiving review approval, see *4.2.1. ARB PERMIT*. An ARB permit and a TOKI building permit must be displayed before site clearing, material delivery, or construction may begin.

3.3.4. DEMOLITION REVIEW

Before applying for an ARB permit for demolition, the following should be submitted for ARB review and approval:

1. An as-built survey dated within twelve (12) months showing existing conditions.
2. A demolition site plan indicating the extent of demolition as well as tree protection fencing for trees, natural areas, existing landscaping, and unique topography during demolition.

   Revegetation of the site access and any needed vegetated buffer enhancement must be shown.
3. A descriptive plan and timeline for plant succession in mulched areas if naturalization is intended.

Return to top of section.

Return to Table of Contents.

4. CONSTRUCTION PROCESS

4.1. GENERAL REGULATIONS

These standards and guidelines are designed to enhance Kiawah Island's overall appearance to residents and visitors alike. They are not intended to restrict, penalize, or impede those who adhere to them.

Repeated violation of these standards and guidelines may result in the suspension of an ARB permit until corrections have been made by the builder. Additionally, a builder who repeatedly violates either the letter or spirit of these standards and guidelines may be required to post a larger construction deposit or, in the extreme, be prohibited from working on Kiawah Island.

4.1.1. ISLAND ACCESS

Access to the Island is controlled by KICA. All incoming vehicles must stop at the security gate for identification and permission to enter. Commercial passes for gate access may be obtained at the KICA office and require a contractor agreement.

All builders of single-family and patio homes on Kiawah Island must have, at a minimum, an active Residential Builder License issued by the State of South Carolina and a current TOKI business license, or a general contractor license for multi-family and commercial projects.

Construction workers are allowed access to and from the construction site only and are strictly forbidden from riding about the Island. Vehicles may be periodically searched by KICA to protect all builders and property owners from theft of materials and equipment.

4.1.2. HOURS OF OPERATION

The hours of operation allowed for construction workers on the Island are from 7:00 am to 7:00 pm, Monday through Friday, and 8:00 am to 5:00 pm on Saturday. No construction work will be performed on Sundays or national holidays, unless approved by the KICA Director of Security. TOKI and KICA may have more restrictive hours for holidays.

4.1.3. CONDUCT AND APPEARANCE

The conduct and appearance of all construction workers is the responsibility of the builder. Construction workers shall adhere to the following:

1. Loud vehicles and speeding are not allowed on the Island.
2. All construction vehicles must be parked on the construction site unless approved by KICA for parking in the street.
3. Construction workers are not allowed to loiter about island businesses (including the General Store).
4. Loud music from radios and disturbance of property owners or guests will not be allowed at any time.
5. Construction workers are required to wear shirts and shoes.

4.1.4. CONSTRUCTION DURATION

The construction of all single-family and patio home residences, and exterior completion for all multi-family and commercial projects, must be completed within eighteen (18) months from the date of issuance of an ARB permit, with all exceptions and/or extensions requiring ARB approval.

4.1.5. VIOLATIONS

Violations that are discovered will be documented by ARB staff, and the builder will be notified to make corrections. Each violation that is not corrected within ten (10) business days will again be documented, and a new fine may be levied. Copies will also be sent to the property owner and the architect or landscape architect as appropriate.

A. FINES

Once the initial notice has been sent to the builder, all future violations, nonconforming conditions, or unapproved exterior changes to the approved building plan will be documented, and a fine levied against the posted construction deposit. Additional fines may be levied as well. A copy of the report will be sent to the builder, the architect and/or the landscape architect, and the property owner. The amounts of the fines are subject to periodic increases at the sole discretion of the ARB. See the ARB *website* for the current list of fines.

B. APPEALS

An appeal of a fine or decision must be made within ten (10) business days of issue by submitting an *Appeal Application Form* and supporting documentation to the ARB office for consideration by the board members. An appointment may be scheduled during an ARB meeting for discussion of the issue. The subsequent determination will be final and binding to all concerned.

C. LEGAL ACTION

The ARB may elect to pursue legal action if it deems such recourse appropriate in resolving violations and collecting fines.

4.2. BEFORE CONSTRUCTION

After completing the review process and receiving final approval of the stakeout and construction documents from the ARB, several steps shall be followed before any site clearing, material deliveries, or construction may begin.

4.2.1. ARB PERMIT

An ARB permit must be obtained for all new construction and for maintenance, improvements, major improvements, and demolition of existing homes and buildings. The receipt of an ARB permit does not preclude the necessity of also obtaining TOKI zoning and building permits. Such permits are required for construction, along with any additional permits from other agencies that may be necessary (e.g., to build a dock, a permit from BCM is required). Please be aware that nonconforming conditions inadvertently not addressed during or before permitting may not be considered approved. For ARB permit submittal requirements, see the list below:

A. NEW CONSTRUCTION PERMIT REQUIREMENTS

Submit the following items to obtain an ARB permit for new construction:

1. One (1) digital set of construction documents, including landscape, architectural, structural, MEP, and civil plans, as applicable.
2. Completed *Construction Application Deposit and Agreement Form*.
3. ARB review fee (if not already provided per preliminary submittal checklist) and construction deposits.
4. KICA encroachment permit.
5. Install tree protection fencing.

B. MAINTENANCE PERMIT REQUIREMENTS

An ARB permit for maintenance may be obtained online by accessing Kiawah Island's *Online Permitting Portal* and submitting the following:

1. Documentation of scope of work, material and product details, and other applicable information.
2. Completed *Onsite Color Review Form*, if applicable.
3. Completed *Construction Application Deposit and Agreement Form*.
4. ARB review fee and construction deposit.
5. KICA encroachment permit.

C. IMPROVEMENT PERMIT REQUIREMENTS

Upon review approval, submit the following items to obtain an ARB permit for improvements:

1. One (1) digital set of construction documents as applicable.
2. Completed *Onsite Color Review Form*, if applicable.
3. Completed *Construction Application Deposit and Agreement Form*.
4. ARB review fee and construction deposit.
5. KICA encroachment permit.

D. MAJOR IMPROVEMENT PERMIT REQUIREMENTS

Upon review approval, submit the following items to obtain an ARB permit for major improvements:

1. One (1) digital set of construction documents, including landscape, architectural, structural, MEP, and civil plans, as applicable.
2. Completed *Construction Application Deposit and Agreement Form*.
3. ARB review fee and construction deposits.
4. KICA encroachment permit.
5. Install tree protection fencing for which the ARB has required tree and understory protection in its review.

E. DEMOLITION PERMIT REQUIREMENTS

Submit the following to obtain an ARB permit for demolition:

1. An as-built survey dated within twelve (12) months.
2. A demolition site plan.
3. A descriptive plan and timeline for plant succession if naturalization is intended.
4. Completed *Demolition Application Deposit and Agreement Form*.
5. ARB review fee and demolition deposits.
6. KICA encroachment permit.

Upon receipt of the required items, the ARB will review the permit submittal. Once the submittal requirements have been satisfied, an ARB permit will be issued within ten (10) business days.

For new construction and some major improvements, the following shall be completed after receipt of an ARB permit and before the start of construction:

1. Order and install the construction sign. See *4.2.2. CONSTRUCTION SIGN* for more information.
2. Apply for TOKI zoning and building permits.

3. If applicable, obtain approvals for lots adjoining golf courses.
4. Post the ARB permit, TOKI permits, and KICA encroachment permit at the construction site.
5. Place the dumpster and portable toilet on the construction site per the locations approved during the review process.

4.2.2. CONSTRUCTION SIGN

Construction signage is required for every new construction site. Maintenance, improvements, and major improvements do not require a sign, but one may be installed if desired. Several area sign companies have the specifications required by the ARB for construction signs. Only the following information shall be placed on the sign:

1. Property owner(s) and hometown.
2. Architect.
3. Landscape architect.
4. Builder.

Telephone numbers and other information are prohibited. See *5.6. CONSTRUCTION SIGN GRAPHIC & SPECIFICATIONS* for more information. A project-oriented construction sign may be used for multi-family and commercial projects.

The ARB supports property owners, architects, landscape architects, and builders in advancing sustainable building practices on Kiawah Island. In acknowledging those efforts, the ARB allows for whole green building and/or site and landscape certifications (e.g., *LEED*, *ZERH*, etc.) to be displayed on construction signs. See *5.7. CONSTRUCTION SIGN WITH GREEN BUILDING CERTIFICATION GRAPHIC & SPECIFICATIONS*.

4.2.3. WILDLIFE

If a bird of prey, alligator, bobcat, or other wildlife den or nest is discovered during site clearing, the ARB office and TOKI must be contacted before continuing work.

4.2.4. DE-WATERING

Many properties require de-watering before and during construction, which must continue constantly for extended periods of time. If this is necessary, please adhere to the following:

1. All water removed from the site must be discarded to the nearest storm drain managed by KICA. Water should never be drained onto neighboring properties, including the dune field and marshes.
2. Pumps with low decibel ratings are preferred. In addition, pumps should be muffled with sandbags to keep vibration noise to a minimum.
3. The ARB recommends pre-notification to neighbors when dewatering is scheduled for an extended period of time.

4.2.5. SITE CLEARING

Site clearing may begin in preparation for construction, in keeping with the following requirements. See *4.3.4.B. TREE PROTECTION* for additional standards and guidelines on protective fencing of areas and individual trees to be preserved.

1. No site clearing may occur without first obtaining an ARB permit.
2. Any clearing between the building setbacks and the property line requires approval by the ARB.
3. The builder shall be responsible for locating existing utilities before any excavation. Berkeley Electric (see *5.2. RESOURCES* for contact information) must be contacted for the delivery of any additional conduit and specifics on its placement.

4. At the conclusion of site clearing, submit dated photographs to the ARB office.

4.3. DURING CONSTRUCTION

All construction on Kiawah Island will be under observation by the ARB. Compliance with the standards and guidelines of the construction process and the permitted construction plans will be checked and reviewed on a regular basis. See *4.4. INSPECTIONS* for further information.

4.3.1. CONSTRUCTION SITE ACCESS

1. Access to the construction site should be limited to the proposed driveway location. Access over or through adjacent properties is expressly forbidden.
2. Oversized material deliveries require arrangement with KICA Security at least two (2) business days before arrival at the security gate to the Island. Any costs incurred must be borne by the builder.
3. Care should be taken when loading trucks hauling construction waste so as not to have it spill over while in transit. Builders will be held responsible for waste and debris falling from construction vehicles.

4.3.2. CONSTRUCTION SITE APPEARANCE

It is imperative that all construction sites be maintained in a clean and tidy manner at all times. If not so maintained, the ARB may impose fines and, in some cases, issue a stop work order.

1. All construction materials must be kept within the property lines, and a clear street right-of-way should be maintained.
2. No construction waste or trash shall be strewn about the site or piled openly. This requirement shall be strictly enforced as untidy sites present a negative image to visitors and property owners.
3. Fires are not allowed on construction sites under any circumstances.

4.3.3. MATERIAL STORAGE AND WASTE DISPOSAL

1. Material storage areas should be in an inconspicuous area of the construction site and should be neat and orderly. The use of an adjacent property or the KICA right-of-way for access or material storage without the written permission from the property owner is prohibited.
2. Temporary storage structures approved by the ARB may be used to store materials, provided the structure is minimal in size. Storage structures may not be used as living quarters, nor may any building undergoing a major improvement be used as living quarters by construction workers.
3. The ARB discourages the placement of construction trailers on residential construction sites. In the event that the ARB approves a construction trailer, a minimum-sized, industry-standard trailer must be used. The construction trailer must not be marked with logos or graphics, must be screened by vegetation, and must be removed once construction is complete.
4. At the end of each workday, construction materials must be stored neatly and all construction waste placed in a commercial dumpster.

4.3.4. ONSITE REQUIREMENTS

Construction sites for new construction and significant major improvements must include the following (and may apply to improvements and maintenance):

A. TEMPORARY EQUIPMENT, FACILITIES, AND SIGNAGE

1. Commercial dumpster – A commercial dumpster is required on each construction site and shall be emptied when necessary.

2. Portable Toilet – Each construction site is required to have a portable toilet at all times for the use of workers. It must be placed at least twenty-five (25) feet from the street in an inconspicuous location with the door facing away from the street and neighboring buildings.
3. Temporary Utilities – Temporary utilities must be installed in a neat manner. The temporary power pole must be at least fifteen (15) feet from the front property line, installed plumb, and not used for the placement of signs. Installation of the sanitary sewer and water lines must be completed using small trenching equipment, as large backhoes may create damage to natural areas.
4. Construction sign and permits – See *5.6. CONSTRUCTION SIGN GRAPHIC & SPECIFICATIONS* for more information.

B. TREE PROTECTION

The ARB requires tree protection fencing to enclose the entire work area of the construction site, protecting natural areas that are to be preserved. These preserved areas are not to be altered, cleared, or pruned in any way, both during and after construction, without review and approval from the ARB.

Maintenance tree pruning and vine removal for trees outside the buildable area is encouraged to occur at the end of construction, so that the construction site is not exposed to neighboring properties throughout the entire course of construction.

No dune lines or Oak trees over three (3) inches DBH or other trees six (6) inches DBH may be removed or pruned at any time without prior ARB approval.

For single-family and patio home lots, the following parameters apply:

1. Tree protection fencing should be 4’ tall orange safety fencing, supported by wooden or metal stakes.
2. Chain-link fencing may be used, if neighborhood property managers allow it, in limited circumstances, such as protecting Grand Live Oak trees.
3. Black silt fencing may also be needed behind the orange fencing if runoff of loose soil onto neighboring properties is a concern.
4. Fencing should be located not more than ten (10) feet from the structure to allow for construction access around a single-family or patio home.
5. For townhome, multi-family, and commercial properties, the following parameters apply:
    a. A combination of four (4) foot tall orange safety fencing and chain-link fencing may be used to secure the construction site and protect existing vegetation. Green screen on the chain-link fencing may be required if in an exposed location.
    b. Black silt fencing may also be needed behind the fencing if runoff of loose soil onto neighboring properties is a concern.
    c. Fencing location will be reviewed on a case-by-case basis. Proposed fencing should protect as much existing vegetation as possible, while considering proposed site development, material storage, and stormwater and utility installations.

All tree protection fencing must be maintained until the completion of construction, and all construction materials and vehicles must remain outside of the preserved areas. Extra care shall be taken with tree protection fencing to avoid injury to any trees not approved for removal.

Trenching through protected areas for utility connections at the right-of-way should be as direct and minimal as possible. Revegetation of areas cleared for utility work will be needed in the final landscape plan. Plant material that blends with existing vegetation to either side and heals the access

should be used.

C. VIEW CLEARING AND PRUNING

Removal or pruning of trees and vegetation for views shall not occur until the building is completely framed. View clearing and pruning requires onsite approval by the ARB. See *2.1.2 EXISTING VEGETATION* for more information.

D. DEAD TREES

Trees that die due to damage during construction must be replaced with mitigation trees. See *2.1.5.1.B. TREE PRESERVATION, REMOVAL, AND REPLACEMENT* for more information.

E. OTHER REGULATIONS

All properties are subject to the SCDES stormwater runoff regulations. These regulations require strict compliance with the Stormwater Management Plan before pruning any vegetation, moving soil, or otherwise doing any construction on the property. A violation may result in civil penalties as well as other adverse action. Erosion control measures should be installed before applying for an ARB permit.

Should the ARB determine, in its sole discretion, that a construction site is not being maintained properly, it may undertake to bring the site into compliance and may deduct related costs from the construction deposit and/or impose additional fines.

4.3.5. CHANGES AFTER FINAL APPROVAL

Builders must have the architect and/or the landscape architect submit proposals for any exterior changes for ARB review before implementation of such changes. Changes shall be clearly identified and coordinated on all relevant drawings and be accompanied by a completed *Construction or Design Change Application Form*. Failure to do so will result in corrective action and may result in fines.

The General Covenants grant the Company power to make corrections to any unapproved exterior changes, which reads as follows:

"…the Company and/or the Association shall have the right to proceed at law or in equity to compel a compliance with the terms hereof or to prevent a violation or a breach. In addition to the foregoing the Company and/or the Association shall have the right, whenever there shall have been built on any lot any structure which is in violation of these restrictions, to enter upon such property where such violation exists and summarily abate or remove the same at the expense of the owner, if after thirty (30) days' written notice of such violation it shall not have been corrected by the owner."

Such expenses incurred for the correction of violations by the ARB will be deducted from the construction deposit.

In the event that the property owner, builder, architect, or landscape architect of record changes during the construction process, the ARB should be promptly notified. A change of builders requires submittal of a new *Construction Application Deposit and Agreement Form* with a deposit from the new builder before the ARB will refund the original builder's initial deposit. In the case of a landscape architect change, submittal of a new sealed landscape plan is required.

4.3.6. DELAYS AND ABANDONMENT

Should construction progress cease for more than ninety (90) days, the ARB must be notified immediately. Measures may be required to minimize impact to neighboring properties should a cleared

construction site become abandoned. Incomplete construction sites are detrimental to their neighborhoods; therefore, once construction has begun, a project must be completed as approved and permitted.

4.3.7. DEMOLITION SITES

The removal of debris from demolition sites shall be coordinated in advance with KICA and shall comply with *4.3.1. CONSTRUCTION SITE ACCESS*. Site cleanliness and access shall comply with *4.3.2. CONSTRUCTION SITE APPEARANCE*. Unless otherwise approved by the ARB, demolition and revegetation of the site access and any needed vegetated buffer enhancement of the site must be completed within three (3) months of the issue date of an ARB permit.

4.4. INSPECTIONS

A minimum of four (4) mandatory onsite inspections will be conducted by the ARB on all new construction and major improvements as applicable to the scope of the project. A special inspection of a construction site will be made upon receipt of a request that cites a specific violation.

4.4.1. FOUNDATION SURVEY AND SITE CONDITIONS

The first inspection shall occur when the foundation walls are just above grade. At this time, the builder must notify the ARB with the submission of a foundation survey that includes the following:

1. Legal description of the property.
2. Recorded property lines, easements, and correct building setbacks.
3. BCM critical line as applicable.
4. Foundation footprint.
5. Distances from all foundation corners to the nearest property lines.
6. For multi-family and commercial projects, foundation surveys may include foundation points instead of the entire building footprint.

The ARB will review the foundation survey and inspect the construction site conditions for the following:

1. Foundation placement conforms with the approved drawings.
2. Framing has not commenced before ARB inspection.
3. Portable toilet is located at least twenty-five (25) feet from the street and in an inconspicuous location.
4. Tree protection fencing is installed according to approved plans and in satisfactory condition.
5. Construction site is clean and orderly.

Should the first-floor framing be constructed before submitting the foundation survey, or if dated photographs are not submitted at the conclusion of site clearing before construction commences, a fine may be imposed and withheld from the construction deposit. In some cases, a stop work order may be issued until the foundation survey is submitted and corrections are completed.

During the foundation construction and subsequent framing, approval shall be obtained from the ARB in advance of removal and/or pruning of Oak trees three (3) inches DBH and greater, other trees six (6) inches DBH and greater, or alteration of existing land topography outside the tree protection fencing.

4.4.2. MATERIALS AND COLORS MOCK-UP

The second inspection shall occur during the onsite review of materials and colors, usually occurring during the framing of the building. An onsite mock-up must be erected of sufficient size (six (6) to eight (8) feet tall) to show the proposed finish materials and colors, with larger mock-ups approved in advance. The following should be included:

1. Foundation walls, louvers, etc.
2. Siding
3. Trim (windows, doors, soffits, eaves, bandboards, cornerboards, etc.)
4. Roof materials (including secondary and decorative elements)
5. Accessory elements (shutters, louvers, etc.)
6. Horizontal finishes for porches, decks, and terraces (decking, pavers, etc.)
7. Fenestration – door and window units may be mocked up to simulate proposed finish colors

In order to view each sample in its proper context, the onsite mock-up must be placed close to the building, unless otherwise directed by the ARB. Once the onsite mock-up has been finalized and is ready for ARB review, an *Onsite Color Review Form* must be completed and submitted with a photo of the completed onsite mock-up to the ARB office.

ARB staff will perform an onsite inspection and return the *Onsite Color Review Form*, either issuing approval or comments indicating adjustments that are required.

Should the builder not submit an *Onsite Color Review Form* before finish materials and colors are applied to the building, a fine may be imposed and withheld from the construction deposit in addition to any adjustments required to comply with ARB standards and guidelines.

4.4.3. FINAL LANDSCAPE PLAN

The third inspection shall occur during the onsite review of the final landscape plan. The final landscape plan submittal is due sixty (60) days before the substantial completion of construction. The landscape architect and ARB staff will meet onsite to review landscape issues, including but not limited to the following:

1. Number of new trees required to meet ARB guidelines.
2. Tree mitigation requirements, if any.
3. Tree locations to achieve filtered views.
4. Screening of service and parking areas.
5. Foundation and property line plantings.
6. Final driveway layout and repair of any right-of-way damage.
7. Grading and drainage.
8. Fence layout and landscape lighting.
9. Any adjustments that are needed to accommodate changes made during the course of construction.

While requirements for the final landscape plan submittal are similar to the *SCHEMATIC LANDSCAPE PLAN* described in *3.2.4. FINAL REVIEW*, the schematic landscape plan is ***not*** to be used in place of the final landscape plan.

Should a final landscape plan not be submitted before installation of landscape material, a fine may be imposed and withheld from the construction deposit in addition to any adjustments required to comply with ARB standards and guidelines.

4.4.4. FINAL INSPECTION AT CONCLUSION OF CONSTRUCTION

The final inspection at the conclusion of construction shall be conducted after the installation of landscaping. A copy of the final inspection shall be sent to the property owner and builder, as recorded on all construction or demolition application forms, noting final construction approval or items requiring

correction.

If a final inspection has not been requested within a year of the date of the Certificate of Occupancy (CO), when scope of work warrants, or expiration of the ARB permit when a CO is not required, the ARB may absorb the construction deposit as a fine, and notice of items requiring correction may be sent to the property owner and builder. Any unapproved changes that require correction must be completed before the final inspection will be approved. Neither the assessment of fines nor their payment relieves the property owner of compliance with these standards and guidelines.

When the construction of a new building, or maintenance, improvement, or demolition of an existing building has been completed, the property owner and builder must satisfy several requirements and complete all items below on the corresponding final inspection checklist before requesting the final inspection by ARB staff. Once a project has passed final inspection, the deposit(s) will be returned to the issuing party or parties. If the recorded property owner is no longer in possession or the builder is defunct, the ARB will send notices to the last known address. If no response is received within thirty (30) days, the remaining deposit shall be forfeited.

A. NEW CONSTRUCTION AND MAJOR IMPROVEMENT FINAL INSPECTION CHECKLIST

The following items shall be completed before final inspection for new construction and major improvements:

1. Complete construction and remove construction debris.
2. Remove portable toilet, temporary utilities, and construction sign.
3. Install landscaping and a standard mailbox.
4. Submit an as-built survey that includes the following:
    a. Legal description of the property.
    b. Recorded property lines, easements, and building setbacks.
    c. BCM critical line as applicable.
    d. Footprint of all built elements on the property, pervious and impervious.
    e. Conditioned area if there is a maximum.
    f. Roof ridge height.
    g. Lot coverage calculations, including primary and secondary coverage elements.
5. Submit the *Landscape Certification Form* – the ARB requires the landscape architect of record to complete and sign a *Landscape Certification Form* certifying that the landscape design is installed in general conformance with the intent of the approved plans.
6. Request and submit a KICA encroachment inspection sign-off.
7. Submit color digital photos (PDF preferred) of all sides of the house to the ARB.
8. Request regime inspection for major improvements, if applicable.
9. Request ARB final inspection.

B. MAINTENANCE AND IMPROVEMENT FINAL INSPECTION CHECKLIST

The following items shall be completed before final inspection for maintenance and improvements to existing buildings:

1. Complete construction and remove construction debris.
2. Remove portable toilet and temporary utilities, if used on site.
3. Request and submit a KICA encroachment inspection sign-off.

4. Request regime inspection, if applicable.
5. Request ARB final inspection.

C. DEMOLITION FINAL INSPECTION CHECKLIST

The following items shall be completed before final inspection for demolition:

1. Neatly mulch cleared areas.
2. Revegetate site access and complete vegetated buffer enhancements as approved by the ARB.
3. Contact the ARB office to request a final inspection. The demolition deposit will be returned after a satisfactory inspection of the site.
4. If redevelopment is planned, no construction activity may commence following demolition until an ARB permit is issued.

Return to top of section.

Return to Table of Contents.

5. APPENDIX

5.1. DEFINITIONS

Adjacent – 1) Next to, near, or close. 2) Next to or within one hundred (100) feet. Example: Adjacent properties include those properties with any portion being located within one hundred (100) feet of any boundary of the subject property.

Adjoining – Touching or bounding at a point or along a line, bordering, contiguous. Example: Adjoining properties include those properties with any border that is shared in part or in whole with that of the subject property.

Amenity Areas – Any defined area apart from a primary or ancillary structure that facilitates a recreational or leisure activity, including but not limited to putting greens, sports courts, play structures, pools, and seating areas.

Appurtenances – Architectural accessories, including but not limited to play structures, pools, docks, bridges, walls, mailboxes, etc.

At-Grade – At-grade refers to building elements (decks, patios, pools, walkways, etc.) that are eighteen (18) inches or less from the existing grade.

Base Building Height Elevation (BBHE) – "the elevation using the NGVD29 Datum as shown on the Charleston County, South Carolina Flood Insurance Rate Map with an effective date of November 17, 2004. Such elevations will be determined without respect to the flood zone classification and shall only rely on those numerals expressed within the parentheses found on the flood insurance rate maps dated November 17, 2004." – TOKI Zoning Ordinance, ARTICLE IV. – DEFINITIONS, Sec. 12-374. - Definitions.

Base Flood Elevation (BFE)– Height of the base flood, usually in feet, in relation to the National Geodetic Vertical Datum in the Flood Insurance Study Report, or average depth of the base flood above ground surface as determined by FEMA.

Buildable Area – Area within allocated building setback lines where building can occur.

Building Footprint – The area of a lot covered by elements of a building, including but not limited to conditioned area, cantilevered projections, porches, elevated decks, pools, and stairs.

Building Height – The vertical distance from base building height elevation (BBHE), base flood elevation (BFE), minimum first finished floor elevation (MFFFE), or natural ground (grade), whichever is designated as the reference height for the lot, to the ridge height of the dominant roof form, exclusive of minor elements such as chimneys. Building height in stories is the number of habitable floors (stories) exclusive of the area below the first finished floor. One-half story is a habitable floor which has a conditioned area that is no greater than one-half the conditioned area of the largest level below.

Caliper – The measured diameter of a tree in inches (bark to bark) at breast height (see DBH definition).

Contained Areas – Areas of ground surrounded by walls on four (4) sides and raised above the existing grade.

Critical Areas – Areas of fragile habitat growth that typically border salt marsh, lagoons, and beaches,

including all areas designated as critical areas by the Bureau of Coastal Management (BCM) of the South Carolina Department of Environmental Services. Per BCM, critical areas include Coastal Waters, Tidelands, Beaches, and the Beach/Dune System.

DBH – Diameter at breast height (approximately 4.5 feet above ground).

Fence – Any barrier, structure, or installation that may enclose, surround, or mark off any part of a yard. All fence references include deer, electric, wood, louvers/lattice, aluminum, and woven-wire mesh fences, etc.

Fenestration – Any opening in a building's envelope, including doors, windows, and skylights.

Finish Grade – The average elevation of a lot after construction; provided, however, that finish grade shall not be more than six (6) feet above natural ground (grade) elevation when determining maximum building height, and provided further that TOKI may consider more than six (6) feet of finish grade allowable for determining maximum building height.

General Covenants – The Declaration of Rights, Restrictions, Affirmative Obligations and Conditions Applicable to All Property on Kiawah Island (recorded in the Charleston County ROD Office in Book M114, Page 406, and amended by instrument recorded in Book Z124, Page 305).

Ground Floor Level – The lowest constructed floor level, habitable or not, that is accessed directly from the adjacent exterior finish grade, excluding crawlspaces.

Habitable Floor – Any occupiable conditioned level of a building or structure that meets the minimum spatial requirements required by the local building code.

High Ground – The portion of a lot located landward of the BCM critical line for lots abutting or containing marshland, including acreage seaward of the BCM baseline up to the mean high water (MHW) line for oceanfront properties that extend to the MHW line. Freshwater wetlands without a BCM critical line are considered high ground.

Lot– Development parcel identified in a subdivision plat recorded in the Charleston County ROD Office.

Limited Buildable Area – A delineated area of a lot that allows for minor structural elements to be constructed beyond the standard buildable area, provided vegetated buffers along sensitive property lines are preserved. See specific neighborhood supplemental guidelines for more information.

Minimum First Finished Floor Elevation (MFFFE) – The current FEMA base flood elevation (BFE) + TOKI freeboard + a sixteen (16) inch allowance for structure. Minimum first finished floor elevation (MFFFE) corresponds to "lowest floor" referenced in TOKI and FEMA regulations.

Natural Ground– "the average elevation of a lot or development parcel before development activity." – TOKI Zoning Ordinance, ARTICLE IV. – DEFINITIONS, Sec. 12-374. - Definitions. The term *natural grad*e found in neighborhood supplemental guidelines corresponds to this definition for natural ground.

Open-loop Geothermal Systems – Geothermal heat pump or irrigation system that uses groundwater from a conventional well as a source of heat transfer or water use.

Personal Watercraft – Canoes, kayaks, stand-up paddleboards, jet skis, etc.

Pervious – The characteristic of a hardscape material that allows stormwater to pass through and be absorbed into the ground.

Service Yard – The portion of a yard area enclosed by a wall or fence for the purpose of concealing mechanical equipment, utilities, trash containers, and other similar elements.

Uncontained Areas – Areas of fill dirt considered secondary lot coverage that are not surrounded by walls and raised thirty-six (36) inches or more above the existing grade.

Value Finder – The official value chart used to determine the lightness value of the combined effect of paints and stains applied to various exterior claddings, manufactured finish products, and natural finish materials.

Yard Art – Decorative elements or objects that are placed in yards or on the outside of buildings. Yard art includes, but is not limited to, items such as flags and banners, fountains, columns, sculptures of all types, weathervanes, flagpoles, etc. These items are monitored by KICA.

Return to Table of Contents.

5.2. RESOURCES

LINKS:

Kiawah Island ARB Standards and Guidelines

Kiawah Island Frequently Asked Questions

Kiawah Island ARB Forms

ARB Setback Table and Graphics

Kiawah Island Survey Requirements

Kiawah Island Schedule of Fees and Deposits

Kiawah Island Online Permitting

Kiawah Island ARB Disaster Guidelines

Regime Neighborhoods

CONTACTS INFORMATION:

Kiawah Island Architectural Review Board
843-768-3419 | www.KiawahARB.com

Town of Kiawah Island Planning and Zoning
843-768-9979 | https://www.kiawahisland.org/planning___zoning_2.php

Town of Kiawah Island Building Services
843-768-9166 | https://www.kiawahisland.org/building_services.php

Town of Kiawah Island Environmental and Wildlife
843-768-9166 | https://www.kiawahisland.org/wildlife/index.php

Kiawah Island Community Association
843-768-9194 | www.KICA.us

Conservancy of the Sea Islands
843-768-2029 | wwww.conservancyoftheseaislands.org

Kiawah Island Utility
843-768-0641 | http://www.kiawahislandutility.com

Berkeley Electric
843-559-2458 | www.berkeleyelectric.coop

Bureau of Coastal Management
843-953-0200 | https://des.sc.gov/programs/bureau-coastal-management

Register of Deeds Office
843-958-4800 | https://www.charlestoncounty.org/departments/rod/ - deeds

US Green Building Council
800-795-1747 | http://www.usgbc.org

Return to Table of Contents.

5.3. LOT COVERAGE GRAPHIC

The Lot Coverage Graphic example below is intended for illustrative purposes only and does not include all possible site development scenarios. Please contact ARB staff for questions and/or clarifications.

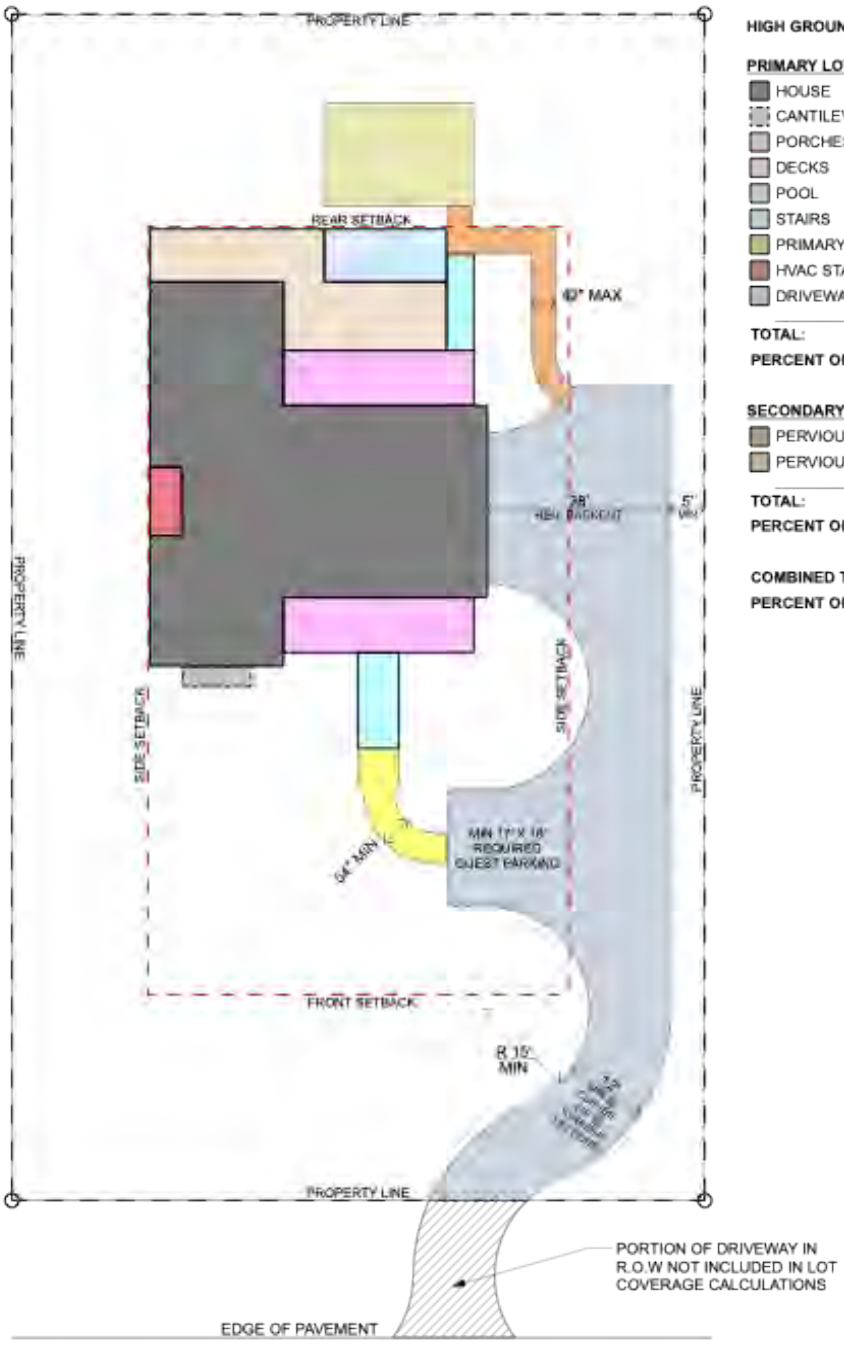

HIGH GROUND (HG):	**17,626 SF**
PRIMARY LOT COVERAGE	
HOUSE	1,910 SF
CANTILEVERED BAY	30 SF
PORCHES	448 SF
DECKS	448 SF
POOL	144 SF
STAIRS	140 SF
PRIMARY WALKWAY	103 SF
HVAC STAND	50 SF
DRIVEWAY	2,416 SF
TOTAL:	**5,689 SF**
PERCENT OF HG:	**32.27 %**
SECONDARY LOT COVERAGE	
PERVIOUS WALKWAY	163 SF
PERVIOUS AT-GRADE SEATING	330 SF
TOTAL:	**493 SF**
PERCENT OF HG:	**2.79 %**
COMBINED TOTAL AREA:	**6,182 SF**
PERCENT OF HG:	**35.07 %**

5.4. DRIVEWAY-STREET DETAIL

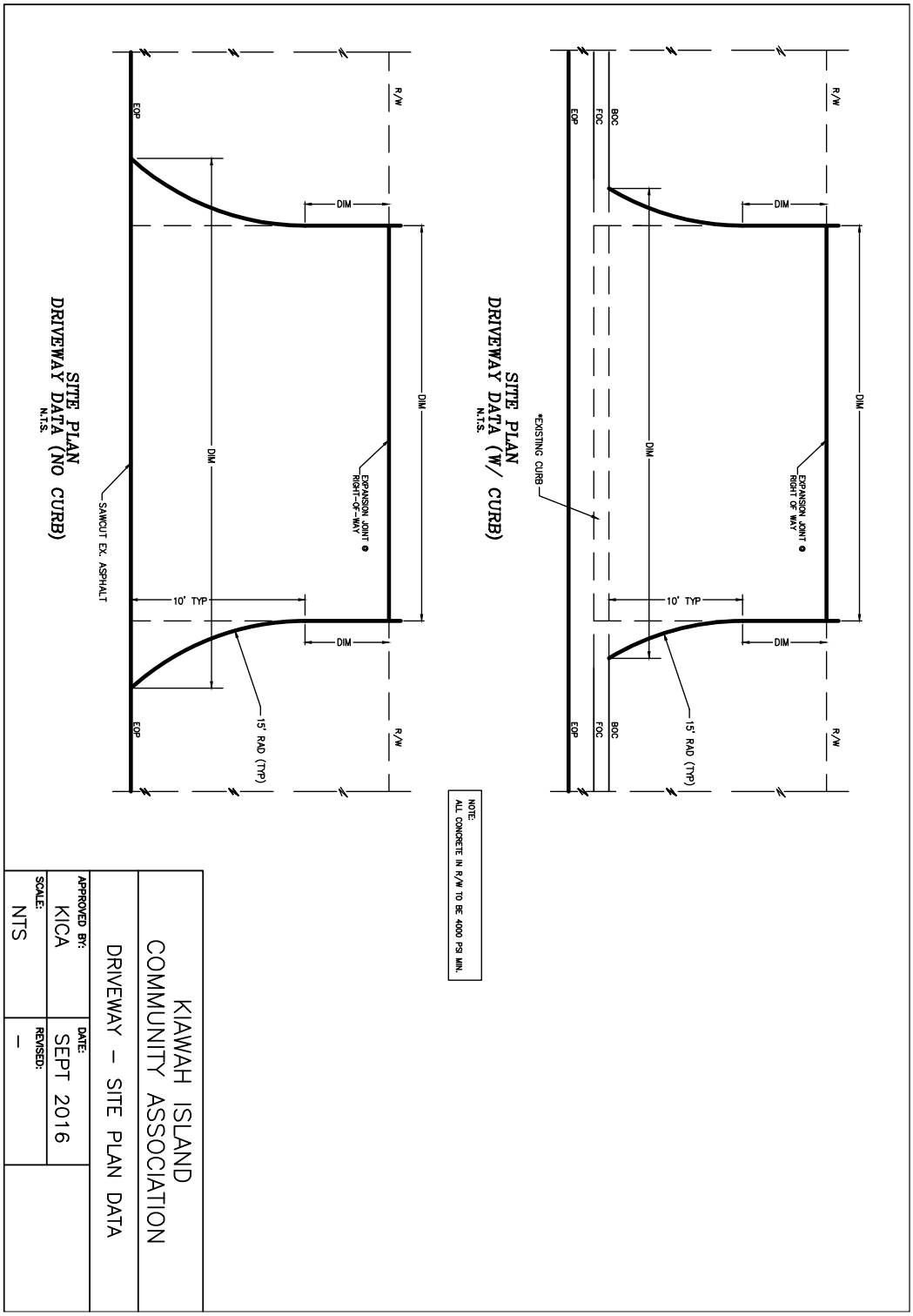

5.5. MATERIAL AND COLOR SAMPLE BOARD

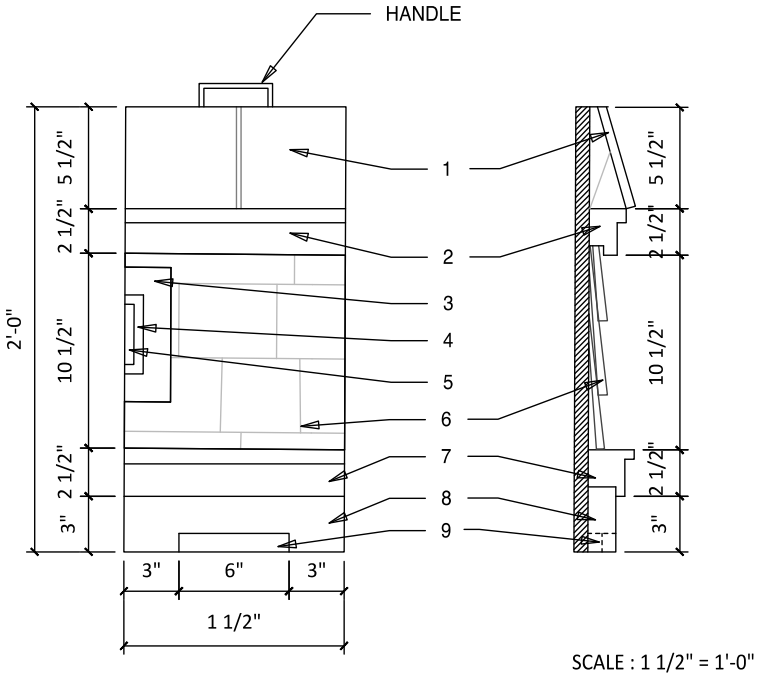

Building Materials and Finishes require a completed Onsite Color Review Form and review of Onsite Sample Board for Final Approval.

Key	Exterior Materials	Material	Manufacturer/Color
1	Roofing		
2	Primary Trim		
3	Secondary Trim		
4	Windows / Doors		
5	Window Glass	[painted black for sample]	
6	Siding		
7	Bandboard		
8	Foundation		
9	Louvers / Lattice		

Architect:

MATERIAL SAMPLE BOARD
FOR ARB FINAL REVIEW

Property Owner:

Meeting Date:

Address
Kiawah Island, SC

5.6. CONSTRUCTION SIGN GRAPHIC & SPECIFICATIONS

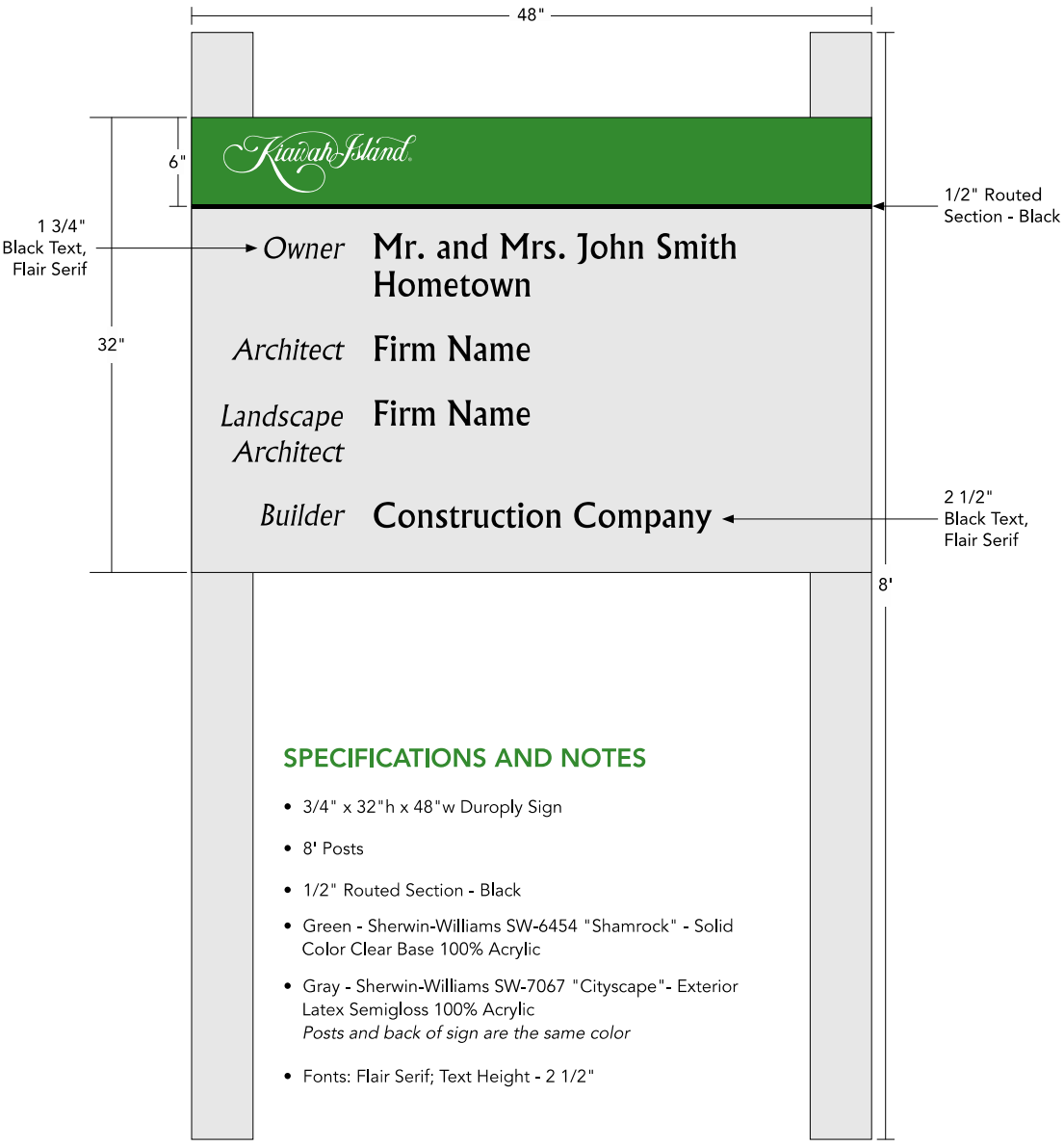

SPECIFICATIONS AND NOTES

- 3/4" x 32"h x 48"w Duroply Sign
- 8' Posts
- 1/2" Routed Section - Black
- Green - Sherwin-Williams SW-6454 "Shamrock" - Solid Color Clear Base 100% Acrylic
- Gray - Sherwin-Williams SW-7067 "Cityscape"- Exterior Latex Semigloss 100% Acrylic
  Posts and back of sign are the same color
- Fonts: Flair Serif; Text Height - 2 1/2"

5.7. CONSTRUCTION SIGN WITH GREEN BUILDING CERTIFICATION GRAPHIC & SPECIFICATIONS

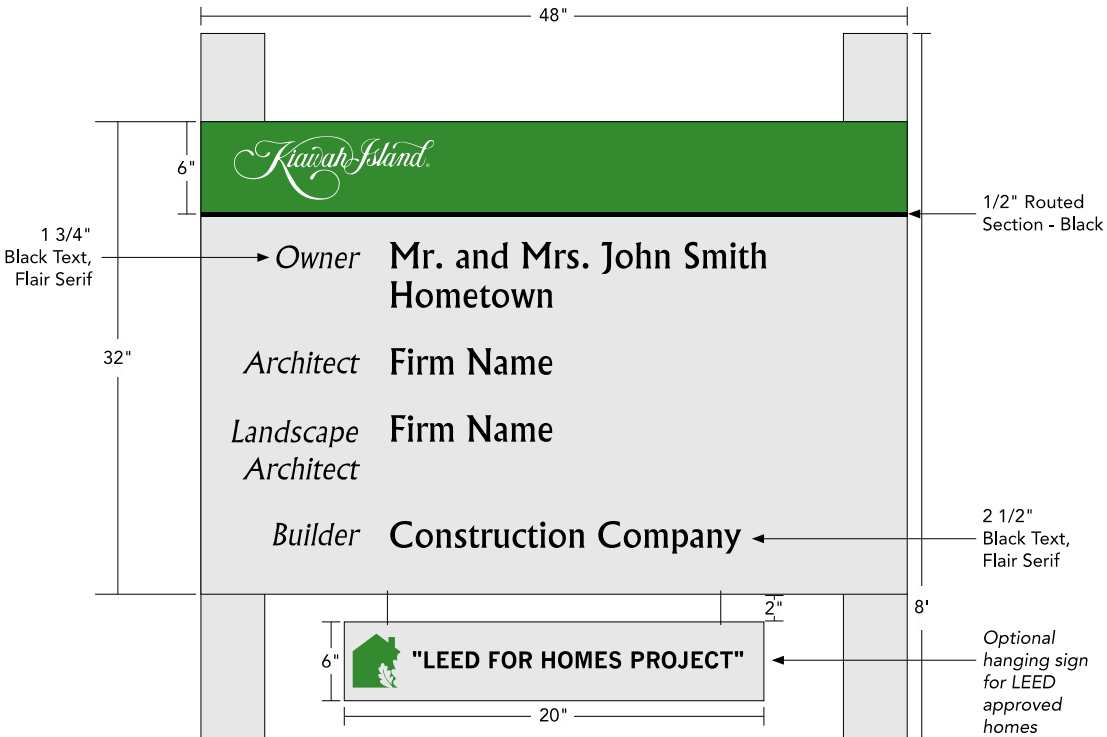

SPECIFICATIONS AND NOTES

- 3/4" x 32"h x 48"w Duroply Sign
- 8' Posts
- 1/2" Routed Section - Black
- Green - Sherwin-Williams SW-6454 "Shamrock" - Solid Color Clear Base 100% Acrylic
- Gray - Sherwin-Williams SW-7067 "Cityscape"- Exterior Latex Semigloss 100% Acrylic
  Posts and back of sign are the same color
- Fonts: Flair Serif; Text Height - 2 1/2"
- LEED board is attached with stainless steel screw hooks attached to sign and stainless steel eye hooks attached to board

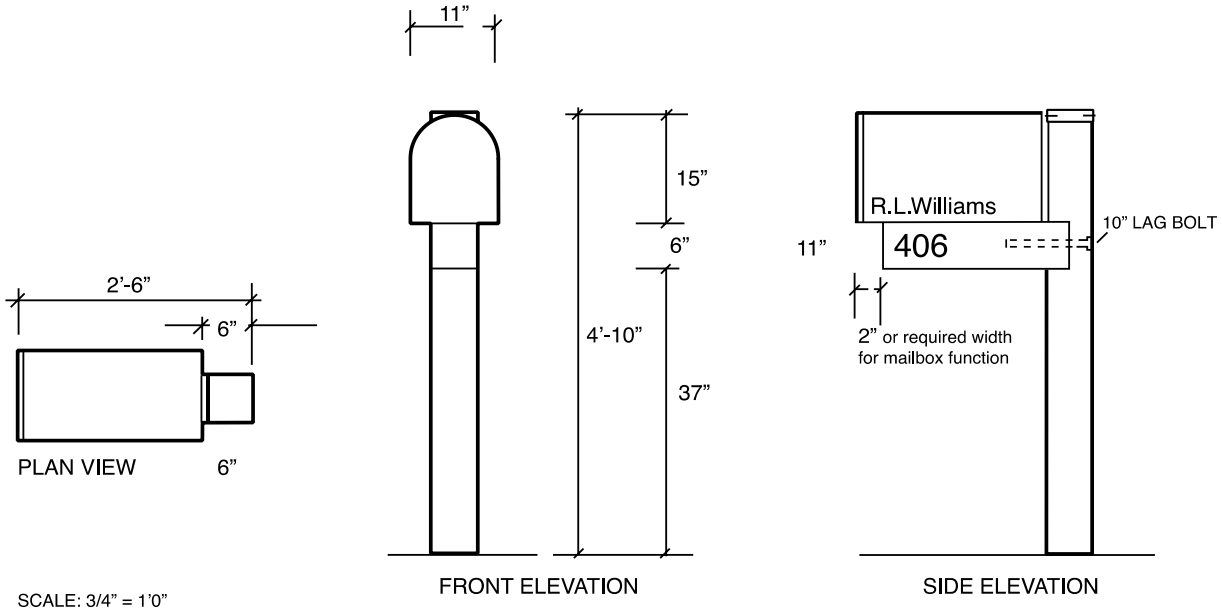

SCALE: 3/4" = 1'0"

SPECIFICATIONS AND NOTES:

a. A mailbox is required for use at all residences. Its purpose is to give emergency service personnel and visitors a consistent device for locating names and addresses.

b. The mailbox shall be #2 standard rural size. Material for the post and arm is 6" x 6" treated Yellow Pine with an overall length of 7'- 0". A 10" lag bolt is required in the connection of the arm to the post.

c. The graphics for the mailbox are applied with 2" white letters (Helvetica Medium). Residence name may appear on both sides of the mailbox. The graphics on the arm are flat, white, 3" hand routed numerals (Helvetica Medium).

d. The mailbox shall be painted Sherwin Williams "Mailbox Blue" or approved equal. The post and arm shall be stained Pittsburg Paint's "Kiawah Brown"or approved equal.

e. Care should be taken to properly treat post to prevent decay or attack from termites.

f. Single-family homes shall be identified only by the graphics included on the mailbox as specified above.

g. 5.7" x 5.7" x 1.2" metal cap with fasteners at front and back sides. Paint to match post color.

5.9. VEGETATION REMOVAL GRAPHIC FOR UNDEVELOPED LOTS

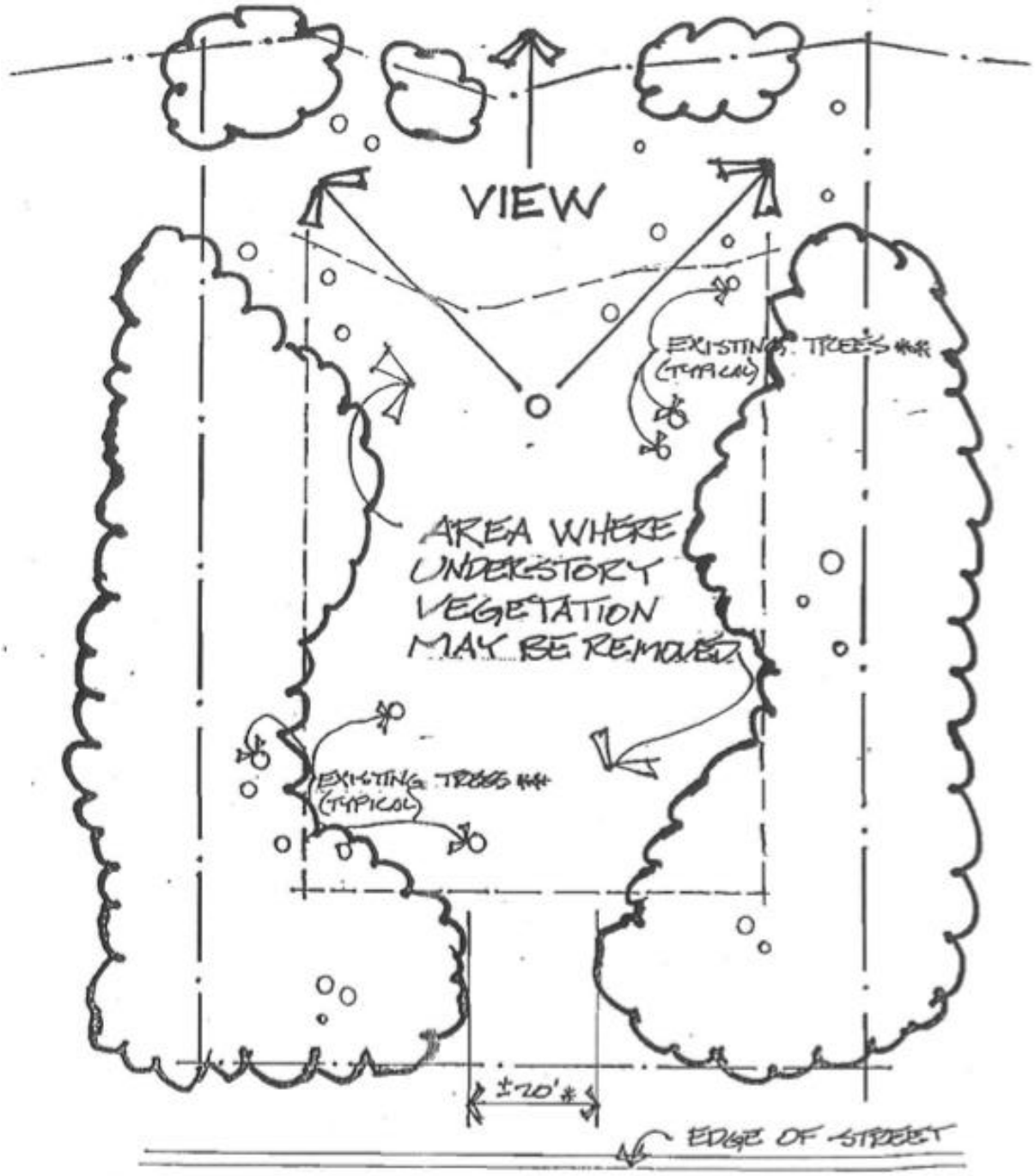

* ±20' ENTRY ACCESS MAY BE RELOCATED DUE TO EXISTING TREES & TOPOGRAPHY.

** EXISTING TREES MAY NOT BE REMOVED WITHOUT ARB APPROVAL

5.10. BEACHFRONT VIEW CORRIDOR GRAPHIC

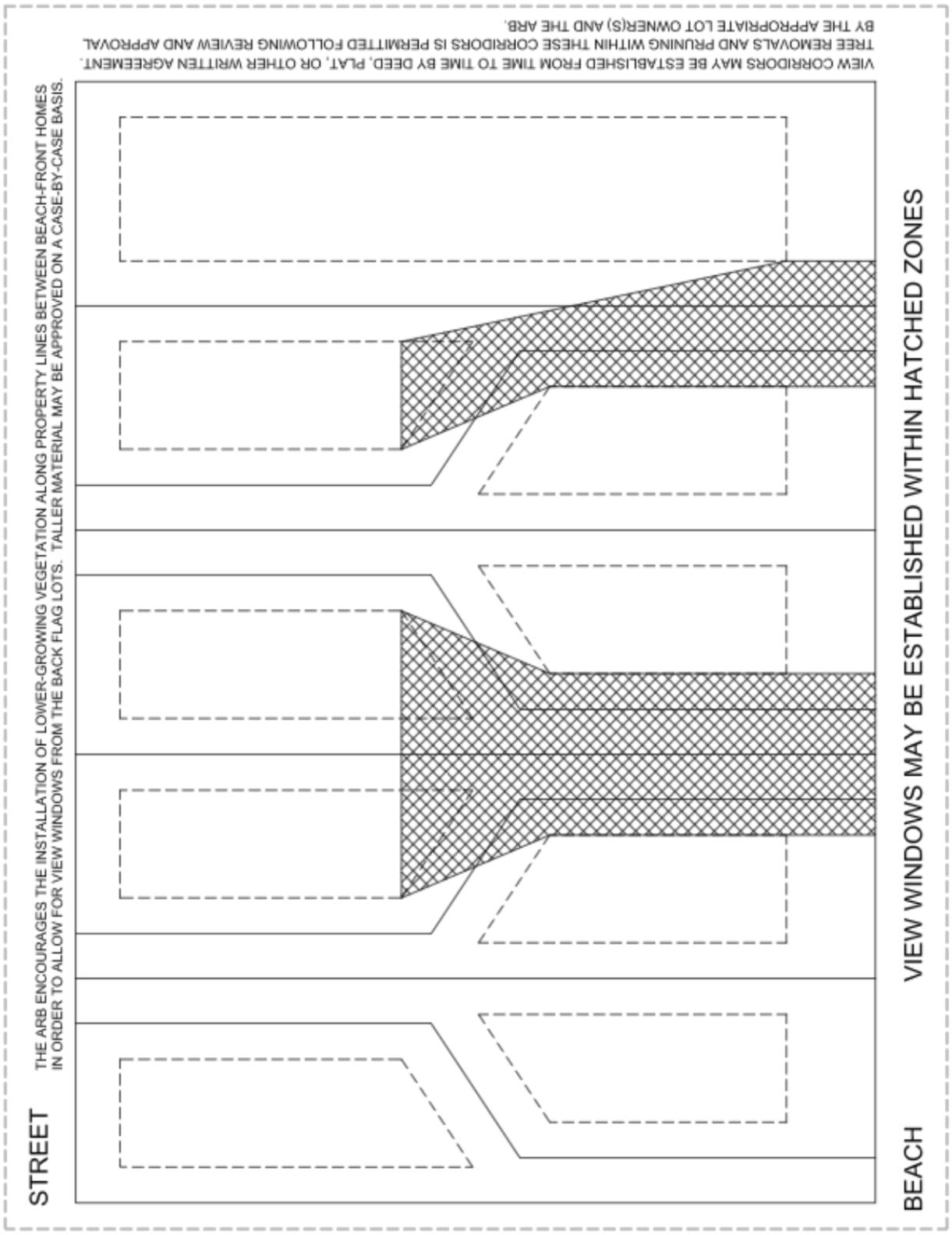

6. INDEX

A

abandonment 25, 59
accessory elements 14, 33, 60
amenity areas 13, 14, 25, 26
ancillary structures 25, 30
appeals 39, 53
approvals 40, 60
appurtenances 34, 63
articulation 29, 30
artificial turf 17

B

backout area 10, 11, 19, 26
base building height elevation 28, 63
boardwalks 25, 27, 35, 36
boat lifts 37
buffers 8, 9, 24, 25, 51, 59
buildable area 6, 8, 13, 14, 15, 17, 25, 26, 27, 37, 38, 63
building form 28
building height 28, 63
building setbacks 6, 25, 26
building size 27, 28
bulkheads 10

C

changes
- architect/landscape architect/builder 58
- design/construction 58, 60
- unapproved 53, 58, 61

commercial. 5, 11, 12, 13, 17, 18, 20, 28, 33, 34, 35, 36, 52, 57, 59
compliance enhancement 21
conceptual review 42
construction sign 55, 57, 70, 71
construction site 52, 56, 57, 58, 59

D

decks 31, 32, 35, 36, 37, 60
delays 25, 58
demolition 23, 24, 25, 51, 53, 54, 59, 61, 62
deposits 22, 24, 52, 53, 58, 59, 60, 61, 66
disaster guidelines 23, 24, 66
docks 25, 37
driveways 10, 11, 19, 25, 35, 56, 68

E

easements 6, 9, 25
erosion control 9, 10, 14, 58
existing buildings 8, 21, 22, 23, 24, 31, 39, 48, 53, 61

F

fees 22, 24, 40, 43, 50, 66
fences 13, 14, 29, 37
fenestration 29, 30, 32, 60, 64
final review 46
fines 9, 53, 58, 60, 61
foundations 14, 16, 31, 32, 33, 59, 60

G

gates 13, 37
grading and drainage 9, 41, 44
groundcover 14, 17

H

hardscape 10, 11, 26, 27, 42, 65
hospitality 20, 21
hot tubs 37

I

improvement 23, 31, 48, 49, 53, 54, 55, 56, 61
- landscape 8, 24
- major 22, 23, 39, 48, 49, 50, 53, 54, 55, 56, 59, 61

inspections 59
- final 60, 61, 62
- final landscape plan 60
- foundation survey 59
- materials and colors 59

irrigation 17, 18

L

landscape 6, 7, 9, 10, 11, 14, 17, 30, 32, 36, 60
lawns 14
lighting 18, 36
- architectural 34
- landscape 18

limited buildable area 25, 64
lot combination/subdivision 6
lot coverage 6, 13, 14, 17, 26, 27
- graphic 44, 46, 50

louvers, lattice 30, 32, 60

M

mailboxes 34, 72
maintenance 17, 22, 23, 31, 48, 53, 54, 55, 56, 61
- landscape 24

material and color sample board 31, 47, 69
materials and colors 23, 30, 31, 32, 33, 47
minimum first finished floor elevation 28, 64
minimum tree count requirements 15, 24, 46
mulch 17, 24, 51
multi-family 5, 11, 12, 13, 17, 18, 20, 28, 33, 34, 35, 36, 52, 57, 59

N

naturalization 24, 25, 51, 54

new construction 8, 24, 31, 39, 40, 53, 54, 56, 59, 61
nonconforming conditions 21, 22, 23, 53

P

parking 10, 12, 19, 33
construction 52
patio homes 5, 12, 13, 14, 17, 20, 26, 27, 28, 30, 33, 34, 35, 52, 57
patio wall 28
permits 23, 40, 53, 54
personal watercraft 35, 64
pierheads 37
play structures 14
pools 25, 33, 37
preliminary review 28, 43
property line change 6
pruning 8, 57, 58, 59

R

railings 33, 35
rain harvesting 9
recreation 17, 20, 21, 25
regime 48, 61, 62, 66
reinforced turf systems 11
retail 20
retaining walls 26
revegetation 24, 51, 59
roofs 25, 26, 28, 30, 31, 60

S

s 7
service yard 29, 33, 65
shrubs 8, 14, 16, 17
siding 31, 32, 33, 60
signage 35, 36
single-family 5, 7, 12, 13, 17, 19, 28, 34, 35, 36, 52, 57
site access 11, 19, 24, 51, 56, 59
site analysis 7, 19, 40
site clearing 40, 55, 56, 59
skylights 30
softscape 14, 15
solar panels 30
stairs 29, 30, 36
stakeout 23, 35, 44, 46
stop work order 56, 59
storm protection 37
stormwater 8, 9, 37, 58
submittals 39, 40, 41, 42, 43, 46, 48, 49, 51, 53, 54, 60
supplemental guidelines 18, 19, 25, 28, 31, 64
survey 66
as-built 50, 51, 54
foundation 59
topographic and tree 41, 42

T

terraces 32, 60
townhomes 5, 13, 17, 20, 57
transmission devices 36
tree protection fencing 53, 54, 55, 57, 59
tree removal 8, 16, 24, 57, 58, 59
trees 8, 14, 15, 16, 22, 24, 25, 37, 58
invasive species 15
trim 31, 32, 33, 60

U

utilities 21, 55, 57

V

value finder 31, 65
variances 5, 6, 16, 22, 40, 41
vegetation removal 8, 24, 73
vehicles 29
construction 52, 56, 57
recreational 35
vents 29, 31, 33
view clearing 58
view corridors 8, 30
view stands 38
violations 9, 52, 53, 58, 59

W

walkways 12, 13, 18, 25, 26, 27

Y

yard art 14, 25, 65

Return to Table of Contents.



1 KIAWAH ISLAND PARKWAY, KIAWAH ISLAND, SC 29455

1.800.277.7008 • 843.768.3419 • www.kiawahisland.com

1996 Recipient of the Urban Land Institute Award for Excellence for Exceptional Community Planning America's
Host Site of the 1991 Ryder Cup and the 1997 World Cup